OKI

OL600ex/610ex
LED Page Printer

MAINTENANCE MANUAL

PREFACE

This Maintenance Manual describes the field maintenance methods for OL600ex and OL610ex LED Page Printers.

This manual is written for use by service persons. Please note that you should refer to the Printer Handbook for the handling and operating methods of the equipment.

CONTENTS

1. **CONFIGURATION ..... 1 - 1**
   - 1.1 System Configuration ..... 1 - 1
   - 1.2 Printer Configuration ..... 1 - 2
   - 1.3 Optional Configuration ..... 1 - 3
   - 1.4 Specification ..... 1 - 5
   - 1.5 Safety Standards ..... 1 - 7
     - 1.5.1 Certification Label ..... 1 - 7
     - 1.5.2 Warning Label ..... 1 - 7
     - 1.5.3 Warning/Caution Marking ..... 1 - 8

2. **OPERATION DESCRIPTION ..... 2 - 1**
   - 2.1 Control Board ..... 2 - 4
   - 2.2 PS Board (Option for OL610ex Only) ..... 2 - 6
   - 2.3 Power Supply Board ..... 2 - 7
   - 2.4 Electrophotographic Process ..... 2 - 9
     - 2.4.1 Electrophotographic Process Mechanism ..... 2 - 9
     - 2.4.2 Electrophotographic Process ..... 2 - 12
     - 2.4.3 Process Operation Descriptions ..... 2 - 15
   - 2.5 Paper Jam Detection ..... 2 - 26
   - 2.6 Cover Open ..... 2 - 29
   - 2.7 Toner Low Detection ..... 2 - 30

3. **PARTS REPLACEMENT ..... 3 - 1**
   - 3.1 Precautions for Parts Replacement ..... 3 - 1
   - 3.2 Parts Layout ..... 3 - 3
   - 3.3 How to Change Parts ..... 3 - 6
     - 3.3.1 Upper Cover ..... 3 - 7
     - 3.3.2 Stacker ..... 3 - 8
     - 3.3.3 LED Head ..... 3 - 9
     - 3.3.4 Eject Roller Assy ..... 3 - 10
     - 3.3.5 Pulse Motor (Main) ..... 3 - 11
     - 3.3.6 Pulse Motor (Registration) ..... 3 - 12
     - 3.3.7 Lower Base Unit ..... 3 - 13
     - 3.3.8 Motor Assy ..... 3 - 14
     - 3.3.9 Hopping Roller Assy ..... 3 - 15
     - 3.3.10 Stacker Cover Assy ..... 3 - 16
     - 3.3.11 Registration Roller ..... 3 - 17
     - 3.3.12 Transfer Roller ..... 3 - 18
     - 3.3.13 Fusing Unit Assy ..... 3 - 19
     - 3.3.14 Back-up Roller ..... 3 - 20
     - 3.3.15 Sensor Plate (Inlet) ..... 3 - 21
     - 3.3.16 Toner Sensor (Adhesion) ..... 3 - 22
     - 3.3.17 Sensor Plate (Outlet) ..... 3 - 23
     - 3.3.18 Manual Feed Guide Assy ..... 3 - 24
     - 3.3.19 Sensor Plate (Paper Supply) ..... 3 - 25
     - 3.3.20 Main Control PCB ..... 3 - 26
     - 3.3.21 Power Supply Board and Contact Assy ..... 3 - 27
     - 3.3.22 Transformer ..... 3 - 28

3.3.23 Cassette Guide L ..... 3 - 29
3.3.24 Cassette Guide R ..... 3 - 30

4. ADJUSTMENT ..... 4 - 1
4.1 Adjustment (OL600ex) ..... 4 - 1
4.1.1 Maintenance Functions ..... 4 - 1
4.1.2 System Maintenance Mode ..... 4 - 1
4.1.3 Engine Maintenance Mode ..... 4 - 2
4.2 Adjustment (OL610ex) ..... 4 - 8
4.2.1 Maintenance Modes and Functions ..... 4 - 8
4.3 Adjustment When Replacing a Part ..... 4 - 10
4.3.1 Adjustment at the Time of Part Replacement (OL600ex) ..... 4 - 10
4.3.2 Adjustment When Replacing a Part (OL610ex) ..... 4 - 13

5. PERIODICAL MAINTENANCE ..... 5 - 1
5.1 Periodical Replacement Parts ..... 5 - 1
5.2 Cleaning ..... 5 - 1
5.2.1 Cleaning of LED Lens Array ..... 5 - 1

6. TROUBLESHOOTING PROCEDURES ..... 6 - 1
6.1 Troubleshooting Tips ..... 6 - 1
6.2 Check Points before Correcting Image Problems ..... 6 - 1
6.3 Tips for Correcting Image Problems ..... 6 - 1
6.4 Preparation for Troubleshooting ..... 6 - 2
6.5 Troubleshooting Flow ..... 6 - 3
6.5.1 Status Message/Trouble List ..... 6 - 3
6.5.2 Status Message Troubleshooting ..... 6 - 24
6.5.3 Image Troubleshooting ..... 6 - 36

7. WIRING DIAGRAM ..... 7 - 1
7.1 Interconnect Signal Diagram ..... 7 - 1
7.2 PCB Layout and Connector Signal List ..... 7 - 2
7.3 Resistance Check ..... 7 - 13
7.4 Short Plug Setting ..... 7 - 15

8. PARTS LIST ..... 8 - 1

Appendix A Centronics Parallel Interface ..... A - 1
B LocalTalk (RS422) Serial Interface (PS Board Option) ..... B - 1
C Diagnostics Test ..... C - 1
D Maintenance Utility Overview ..... D - 1
E Multi-Purpose Feeder Maintenance ..... E - 1
F High Capacity Second Paper Feeder Maintenance ..... F - 1

1. CONFIGURATION

1. CONFIGURATION

1.1 System Configuration

OL600ex and OL610ex consist of control and engine blocks in the standard configuration, as shown in Figure 1-1.

In addition, the options marked with asterisk(*) are available.

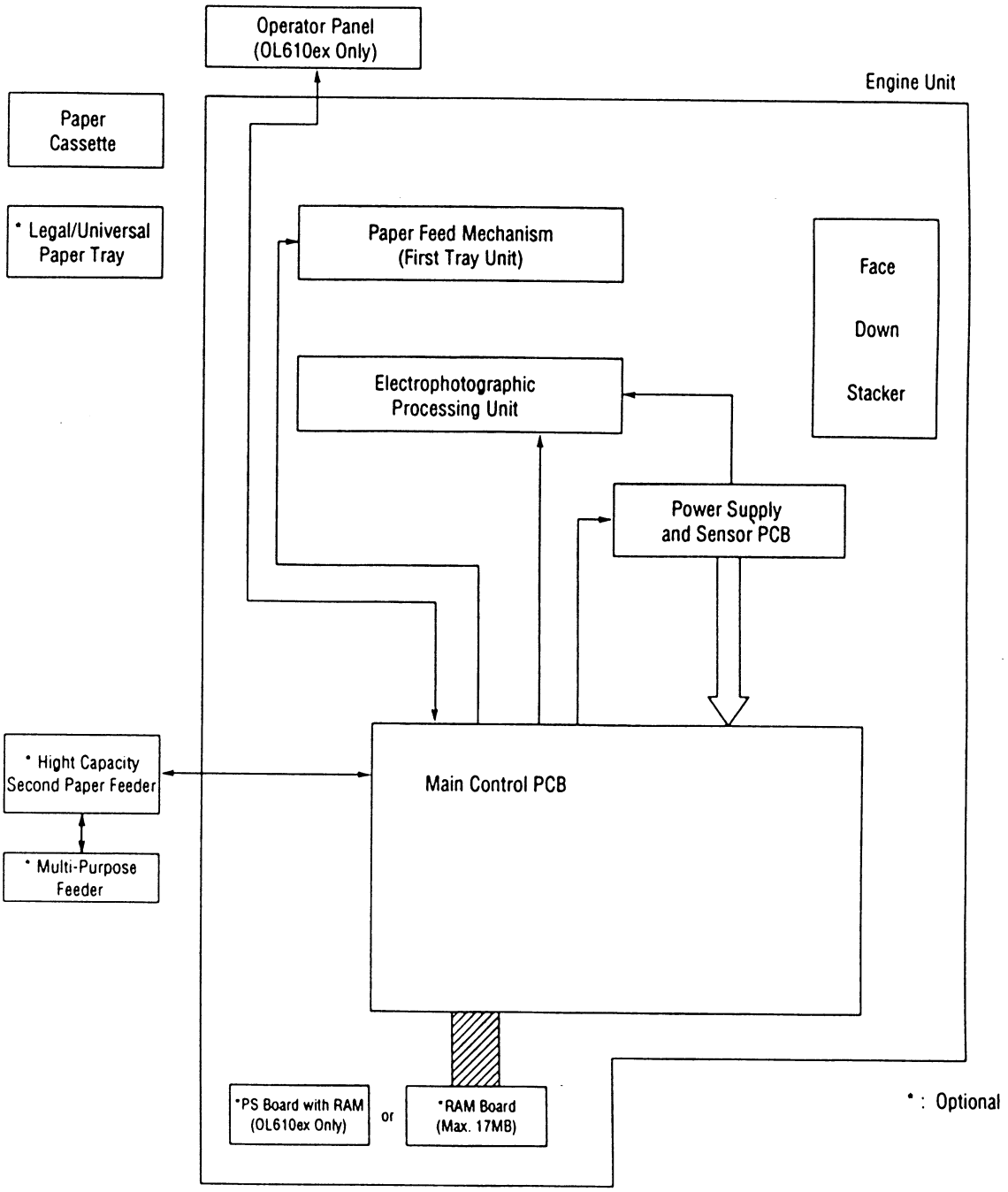

Figure 1-1

1.2 Printer Configuration

The printer unit consists of the following hardware components:

- Electrophotographic Processor
- Paper Feeder
- Main Control PCB
- Operator Panel (OL610ex Only)
- Power Supply Unit

The printer unit configuration is shown in Figure 1-2.

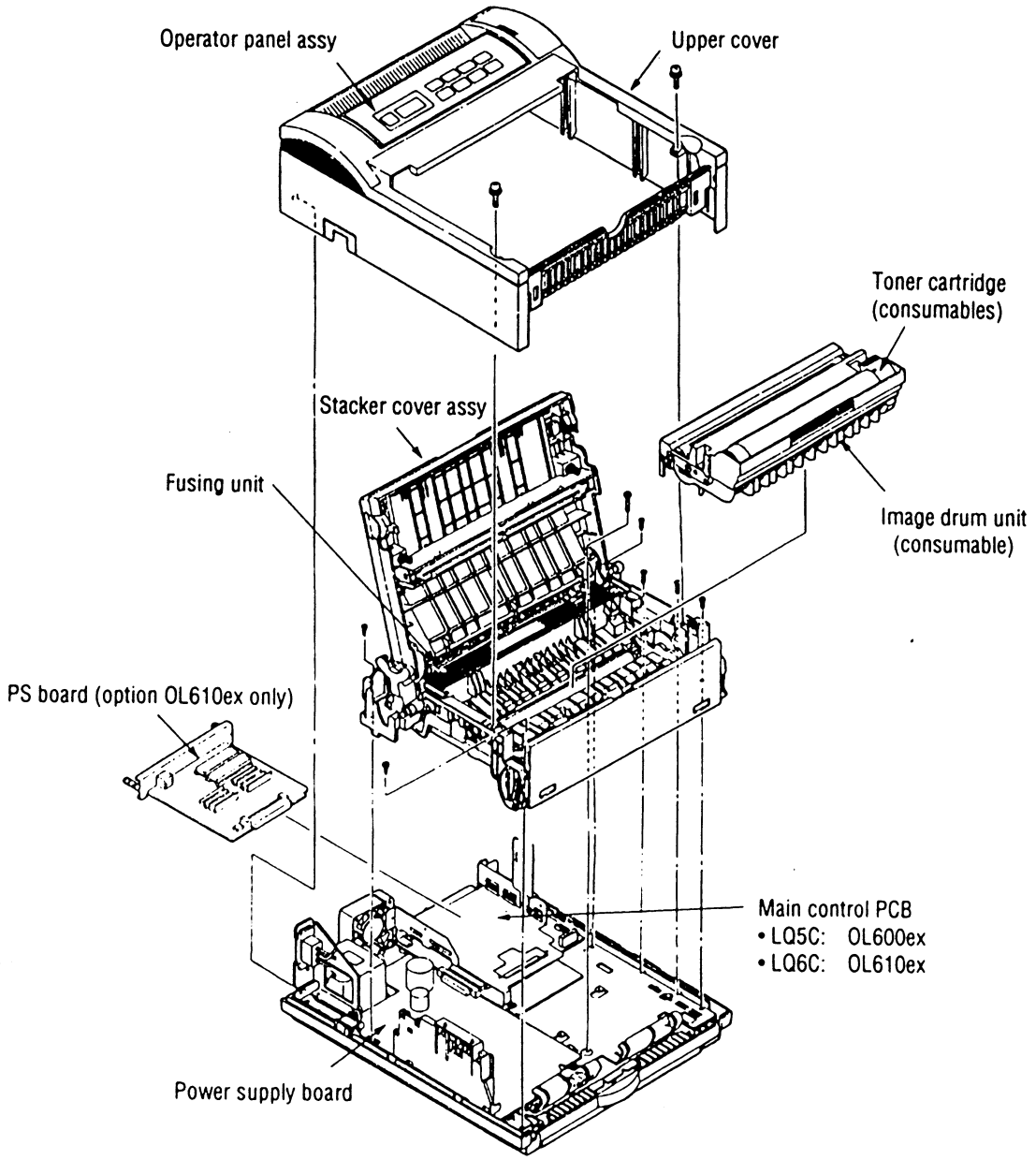

Figure 1-2

1.3 Optional Configuration

The options shown below are available for use with OL600ex and OL610ex. These are available separately from the printer unit.

(1) 1MB Memory Expansion Board

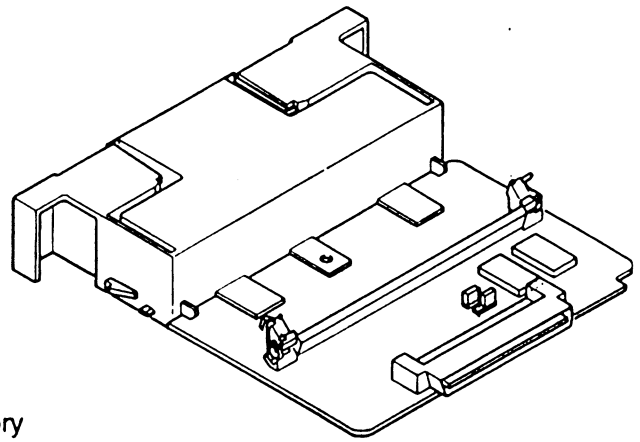

(2) SIMM Memory

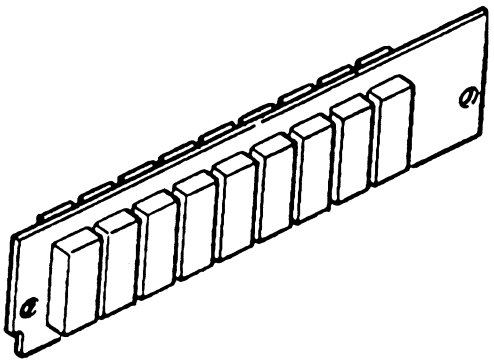

(3) Legal/Universal Paper Cassette

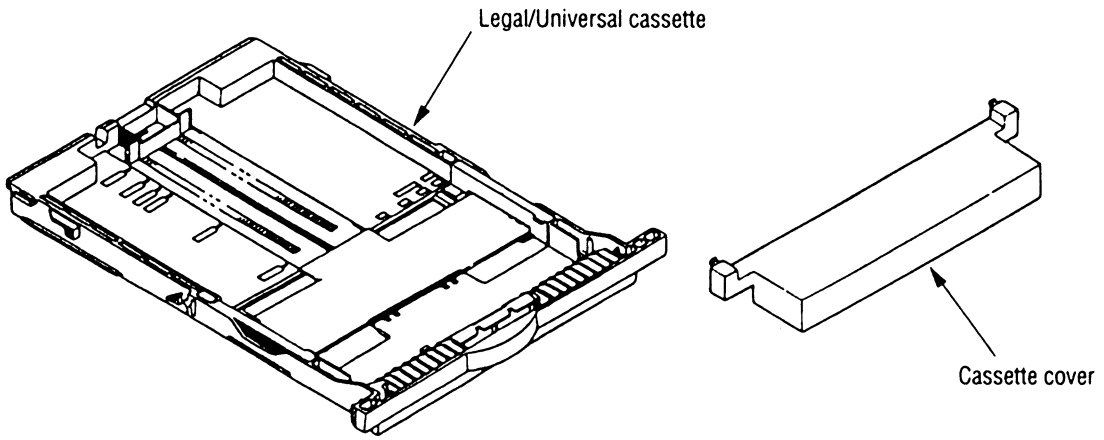

(4) High Capacity Second Paper Feeder

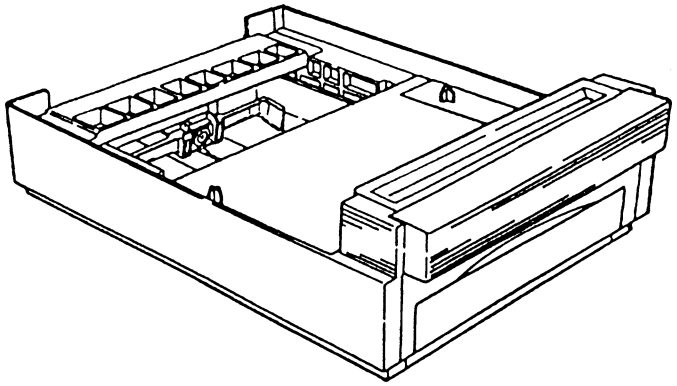

(5) Multi-Purpose Feeder

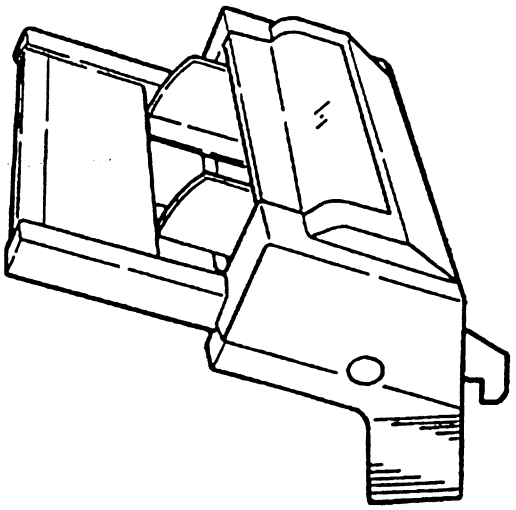

(6) PostScript Board

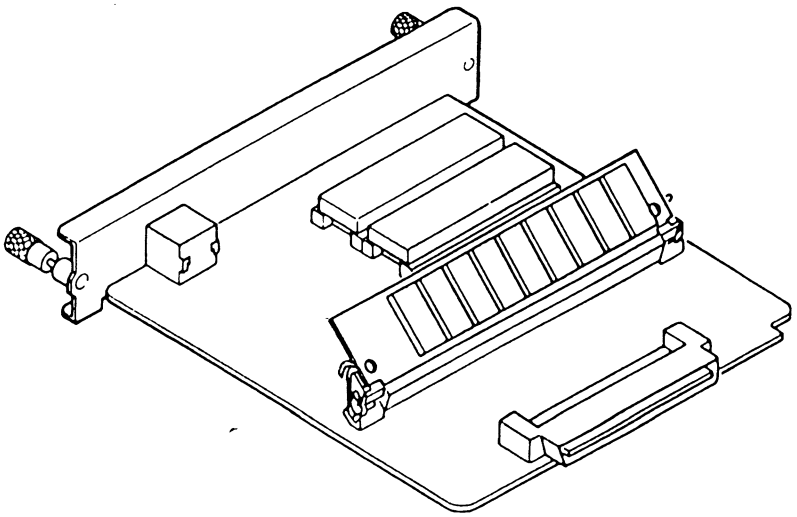

1.4 Specification

(1) Type	Desktop	
(2) External dimensions (excludes protruding portion)	Height 6.3" (160 mm) Width 12.6" (320 mm) Depth 14.17" (360 mm)	
(3) Weight	8 kg	
(4) Developing method Exposing method	Dry electrophotography LED stationary head	
(5) Paper used	<Type> • Standard paper – Xerox 4200 (20 lbs) • Application paper (manual face-up feed) – Label – Envelope – OHP paper (Transparency) <Size> • Standard sizes – Letter (ODA) – Legal (option) – Executive – Envelope – A4 – A5 – B5 – A6 • Applicable sizes – Width: 3.94" to 8.5" (100 to 216 mm) – Length: 5.83" to 14" (148 to 355.6 mm) <Thickness> – Automatic feed: 16 to 24 lbs (60 to 90 g/m²) – Manual feed: Label, OHP paper (transparency) Envelope	
(6) Printing speed	First print: 17 sec. Continuous print: 6 sheets/min. for A4 size paper Warm-up time: 60 sec. [at room temperature 77°F (25°C) and rated voltage (120 VAC)]	
(7) Paper feeding method	Automatic feed or manual feed	
(8) Paper delivery method	Face down/face up	
(9) Resolution	300 x 300 dots/inch	
(10) Power input	120 VAC +5.5%, –15% (ODA) 230 VAC +15%, –15% (ODA)	

(11) Power consumption	Peak:	Approx. 420W
	Typical operation:	Approx. 160W
	Idle:	Approx. 55W
	Power save mode:	Approx. 15W
(12) Temperature and humidity	During operation:	50 to 90°F (10 to 32°C)
	In storage:	14 to 110°F (–10 to 43°C)
(13) Noise	During operation:	48 dB (A) or less
	Standby:	38 dB (A) or less
(14) Consumables	Toner cartridge kit	2,000 (5% duty)
	Image drum cartridge	20,000 (at continuous printing)
		15,000 (3 pages/job)
		10,000 (1 page/job)

1.5 Safety Standards

1.5.1 Certification Label

The safety certification label is affixed to the printer at the location described below.

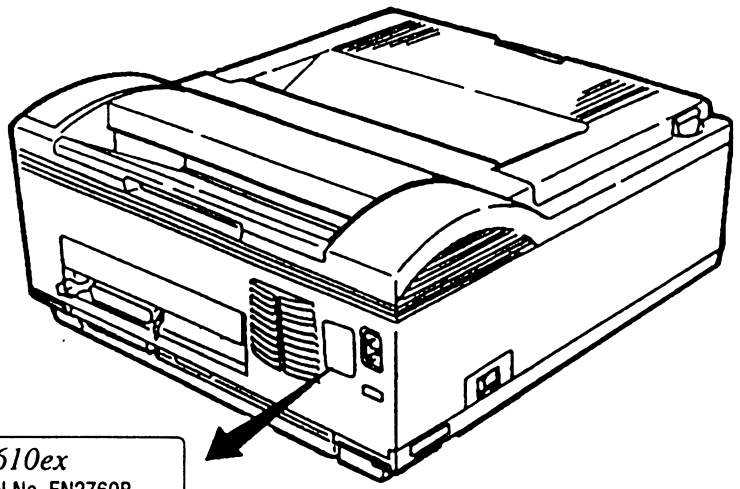

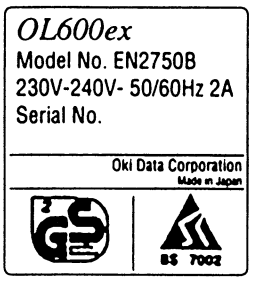

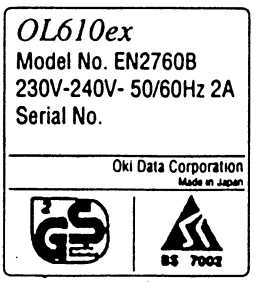

1.5.2 Warning Label

The warning labels are affixed to the sections which may cause bodily injury.

Follow the instructions on warning labels during maintenance.

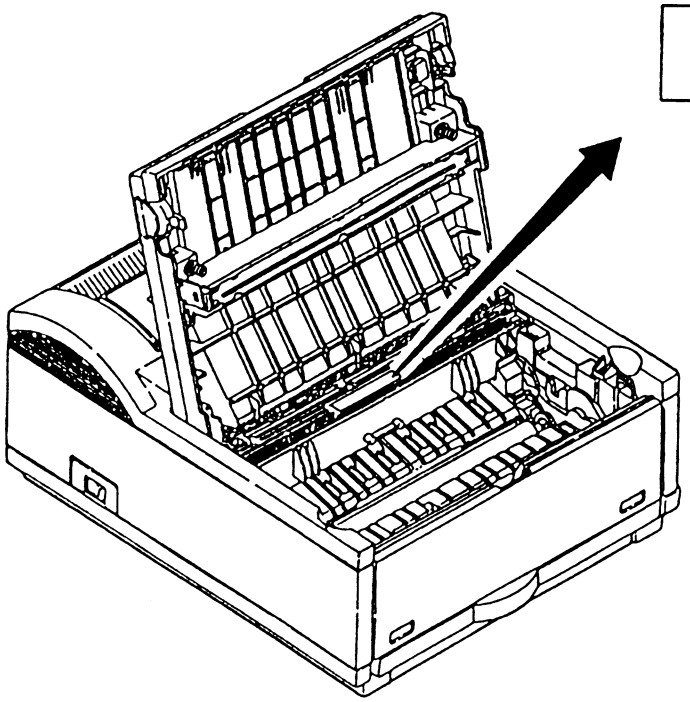

1.5.3 Warning/Caution Marking

The following warning and caution markings are made on the power supply board.

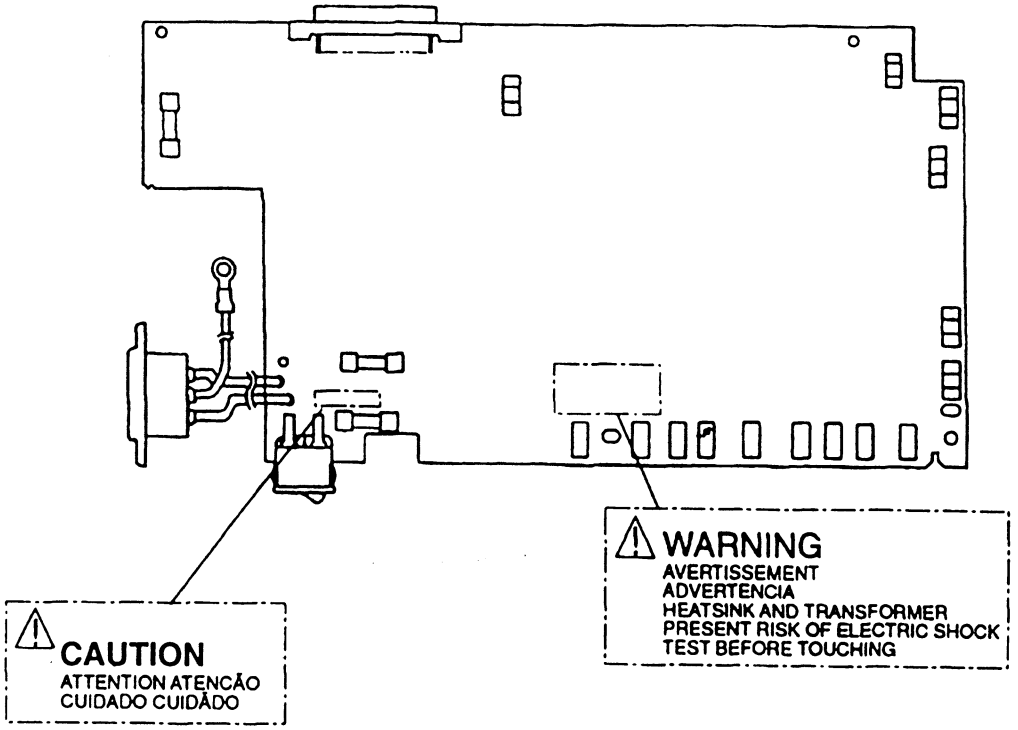

ENGLISH
Heatsink and transformer core present risk of electric shock. Test before touching.
FRENCH
Le dissipateur thermique et le noyau du transformateur présentent des risques de choc électrique. Testez avant de, manipuler.
SPANISH
Las disipadores de color el núcel del transformador pueden producir un choque eléctrico. Compruebe antes de tocar.
PORTUGUESE
O dissipador de calor e o núcleo do fransiormador apresentam risco de choque elétrico. Teste antes de focar.

ENGLISH
Circuits maybe live after fuses open.

FRENCH
Il se peut que les circuits soient sous tension une fois que les fusibles ont éfé rerirés.

SPANISH
Las circuitos pueden estar activos una vez que se hayan abierio los fusibles.

PORTUGUESE
Os circuitos podem estar energizados após os fusiveis se queimarem.

2. OPERATION DESCRIPTION

2. OPERATION DESCRIPTION

OL600ex/610ex consists of a control board, a power supply/sensor board, an operator panel and an electrophotographic process mechanism.

The control board receives data via the host I/F, it then decodes, edits and stores the data in memory. After completing the editing of a single page of data, it references the font memory and generates bit image data, which is transferred to the LED head in one dot line units.

Through the electrophotographic process mechanism, the data is printed on the paper.

The operator panel is used for operations and status display.

OL600ex block diagram is shown in Figure 2-1.

OL610ex block diagram is shown in Figure 2-2.

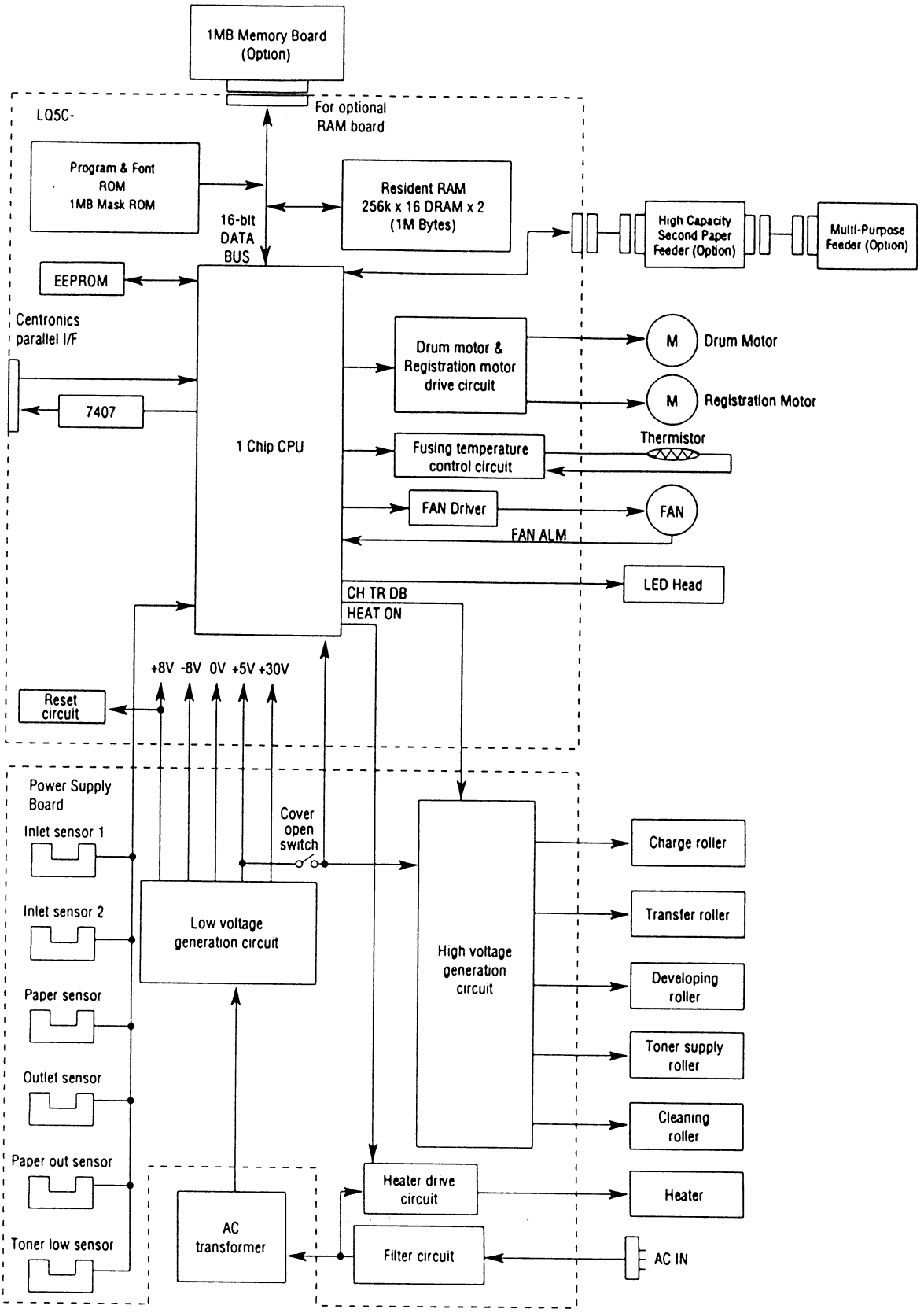

Figure 2-1 OL600ex Block Diagram

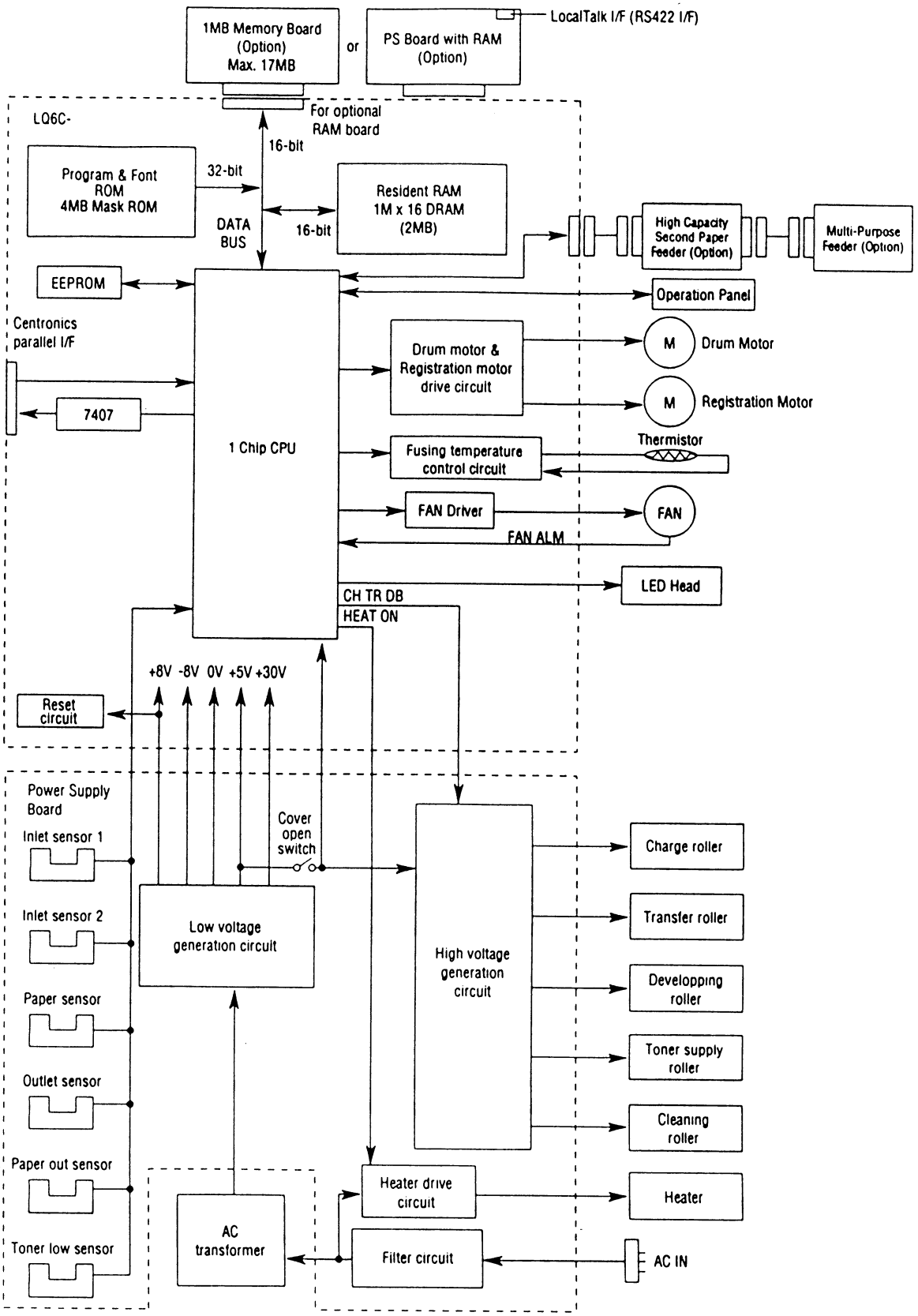

Figure 2-2 OL610ex Block Diagram

2.1 Control Board

The control board consists of a single chip CPU, Program & Font ROM's, one or two DRAMs, an EEPROM, a host interface circuit, and a mechanism driving circuit.

(1) Single chip CPU

The single chip CPU is a custom CPU (32-bit internal bus, 16-bit or 32-bit external bus, 25.54 MHz clock with input frequency from a 12.27 MHz clock) which incorporates the RISC CPU and its peripheral devices, and has the following functions:

Built-in device	Function
Chip select controller Bus controller DRAM controller	Control of ROM, DRAM and I/O device
DMA controller	Transfer of image data from DRAM to video output port
Parallel interface controller	Control of Centronics parallel interface
Video output port LED STB output port	Control of LED head
Timer	Generation of various control timing Monitoring of paper running and paper size
Serial I/O port	Control of operator panel, EEPROM, and options
I/O port	Input and output of sensor and motor signals

(2) Program & Font ROM

The Program & Font ROM stores the equipment program and various types of fonts. Mask ROM is used for a Program & Font ROM. The mounting location of this Program & Font ROM varies depending on the type of ROM (for the mounting location see 7.2).

(3) DRAM

OL600ex/610ex

The DRAM is a resident memory (OL600e: 1MB/OL610e: 2MB) used as a buffer, and it stores edited data, image data, DLL data and macro data.

OL610ex with PS board (option)

The DRAM is a resident memory (2MB on the board plus 0.5MB on the PS board) used as a buffer, and it stores edited data, image data, DLL data and macro data.
In the Post Script emulation, it is used as VM and font cache also.

(4) EEPROM

1,024 bit-Electrically Erasable PROM (EEPROM), is loaded with the following kinds of data:

- Menu data
- Various counter data (Page counter, Drum counter)
- Adjusting parameters (LED head drive time, print start position, paper feed length)

(5) Parallel Interface

Parallel data is received from the host system via parallel interface which conforms to the Centronics specification. IEEE 1284 Bi-directional parallel is supported.

2.2 PS Board (Option for OL610ex Only)

The PS board consists of two Program & Font ROM's, DRAM's, an EEPROM, and a host interface circuit.

(1) Program & Font ROM's

The Program & Font ROMs store the PostScript Level II program and its fonts. Mask ROM is used for the Program & Font ROMs.

(2) DRAM

0.5MB of DRAM's reside on the PS board.

(3) EEPROM

4.096 bit-Electrically Erasable PROM (EEPROM) is mounted on the PS board for storing the PostScript's menu settings.

(4) Local Talk I/F

Apple Talk protocol data is received from the host system via LocalTalk interface. The block diagram is shown in Figure 2-3.

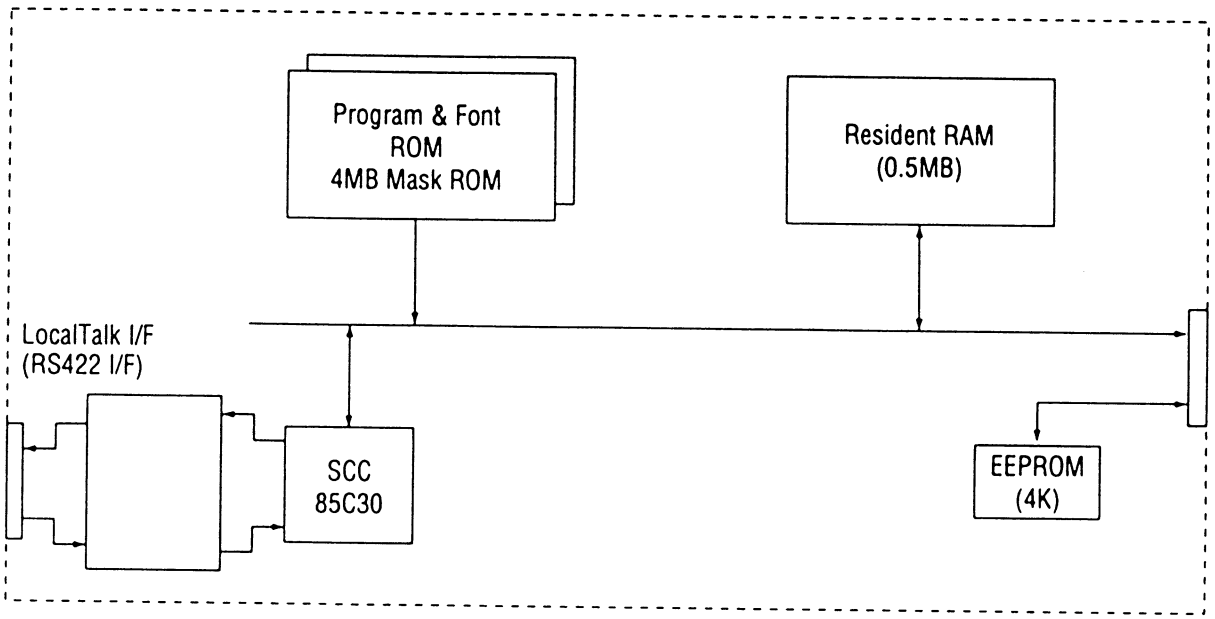

Figure 2-3 PS Board Block Diagram

2.3 Power Supply Board

The power supply board consists of an AC filter circuit, a low voltage power supply circuit, a high voltage power supply circuit, heater drive circuit, and photosensors.

(1) Low Voltage Power Supply Circuit

This circuit generates the following voltages.

Output voltage	Use
+5 V	Logic circuit supply voltage
+30 V	Motor and fan drive voltage and source voltage for high-voltage supply
+8 V	Analog supply voltage
−8 V	PS board and analog circuit supply voltage

(2) High Voltage Power Supply Circuit

This circuit generates following voltages required for electrophotographic process from +5 V, according to the control sequence from the control board. When cover open state is detected, +5 V supply is interrupted automatically to stop the supply of all high-voltage outputs.

Output	Voltage	Use	Remarks
CH	-1.35 KV	Voltage applied to charging roller	
DB	-300 V/+300 V	Voltage applied to developing roller	
SB	-450 V/ 0 V	Voltage applied to toner supply roller	
TR	+500 V to +4 KV/-750 V	Voltage applied to transfer roller	Variable
CB	+400 V	Voltage applied to clearing roller	

(3) Photosensor

The photosensor mounted on this power supply board monitors the paper running state during printing.

The sensor layout diagram is shown in Figure 2-2.

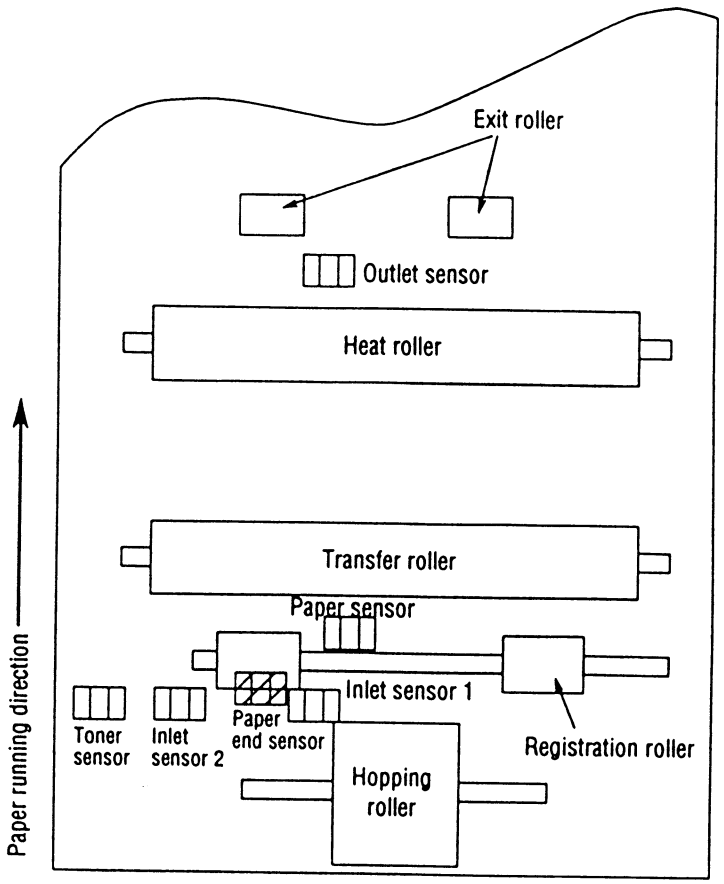

Figure 2-4

Sensor	Function	Sensing state
Inlet sensor 1	Detects the leading edge of the paper and gives the supervision timing for switching from hopping operation to feeding operation. Monitors paper feeding situation and paper size based on the paper arrival time and running time.	ON: Paper exists. OFF: No paper exists.
Inlet sensor 2	Detects the form width.	ON: A4 or larger OFF: Smaller than A4
Paper sensor	Detects the leading portion of the paper. Monitors the paper feeding situation.	ON: Paper exists. OFF: No paper exists.
Outlet sensor	Monitors the paper feeding and size according to the time of arrival to and leaving past the sensor.	ON: Paper exists. OFF: No paper exists.
Paper end sensor	Detects the end of the paper.	ON: Paper exists. OFF: No paper exists.
Toner low sensor	Detects the lack of toner.	- - - - -

2.4 Electrophotographic Process

2.4.1 Electrophotographic Process Mechanism

This mechanism actuates the printing of image data supplied by the control board on the paper by electrophotographic process.

The layout of the electrophotographic process mechanism is shown in Figure 2-5.

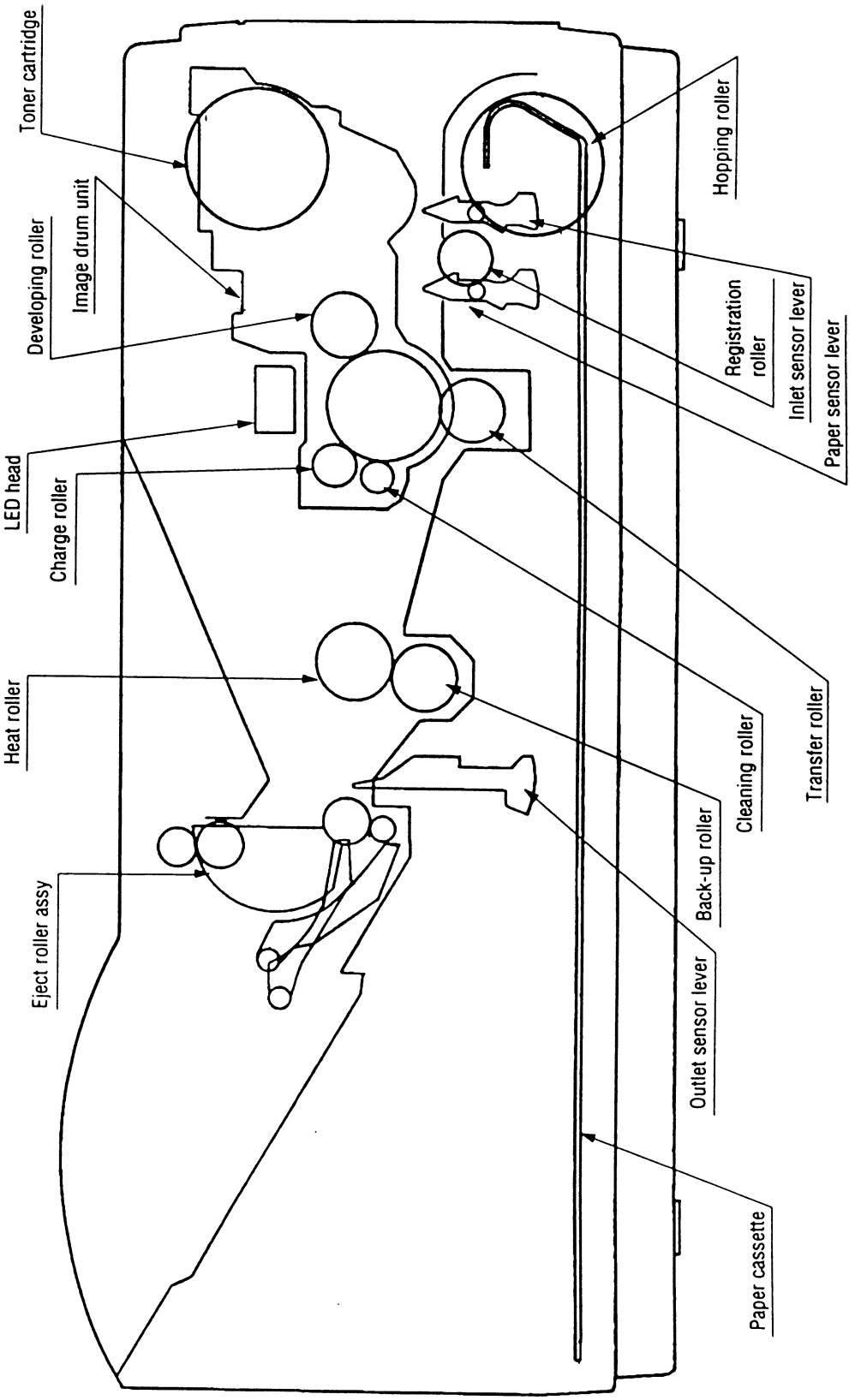
Toner cartridge
Developing roller
Image drum unit
LED head
Charge roller
Heat roller
Eject roller assy
Hopping roller
Registration roller
Inlet sensor lever
Paper sensor lever
Transfer roller
Cleaning roller
Back-up roller
Outlet sensor lever
Paper cassette

Figure 2-5

(1) Image Drum Unit

The image drum unit consists of a sensitive drum, a charger, and a developer. The unit forms a toner image on the sensitive drum, using a electrostatic latent image formed by the LED head.

(2) Registration Motor

The registration motor is a pulse motor of 48 steps/rotation, that is two-phase excited by the signal from the Main Control PCB. It drives the hopping and registration rollers via two one-way clutches according to the direction of rotation.

(3) Drum Motor

The drum motor is a pulse motor of 48 steps/rotation that is two-phase excited by the signal from the Main Control PCB and is the main motor of this mechanism.

(4) LED Head

Image data for each dot line from the control board is received by the shift register and latch register. The 2560/2496 LED's are driven to radiate the image data on the image drum.

(5) Fuser

The fuser consists of a heater, a heat roller, a thermistor and a thermostat.

The AC voltage from the power supply board is applied to the heater controlled by the HEATON signal from the control board. This AC voltage heats the heater. The Main Control PCB monitors the heat roller temperature via the thermistor, and regulates the heater roller to a predetermined temperature (165°C) by connecting or disconnecting the AC voltage supply to the heater.

When an abnormal rise of the heater roller temperature takes place, the thermostat of the heater voltage supply circuit becomes active and forcibly cuts the AC voltage supply.

2.4.2 Electrophotographic Process

The electrophotographic processing is outlined below. The electrophotographic printing process is shown in Figure 2-6.

1 Charging

The surface of the image drum is charged uniformly with a negative charge by applying the negative voltage to the charge roller.

2 Exposure

Light emitted from the LED head irradiates the negatively charged surface of the image drum. The surface potential of the irradiated portion of the image drum surface becomes lower, forming the electrostatic latent image associated with the print image.

3 Developing and toner recovery

When the negatively charged toner is brought into contact with the image drum, it is attracted to the electrostatic latent image by static electricity, making the image visible.

At the same time, the residual toner on the image drum is attracted to the developing roller by static electricity.

4 Transfer

When paper is placed over the image drum surface, the positive charge which is opposite in polarity to that of the toner, is applied to the reverse side by the transfer roller. The toner is attracted by the positive charge and is transferred onto the paper. This results in the transfer of the toner image formed on the image drum onto the paper.

5 Temporary cleaning

Residual toner which remains on the image drum without being transferred is evened out by the cleaning roller and is temporarily attracted to the cleaning roller by static electricity.

6 Fusing

The toner image transferred onto the paper is fused to the paper by heat and pressure.

An electrophotographic process timing chart is shown in Figure 2-7.

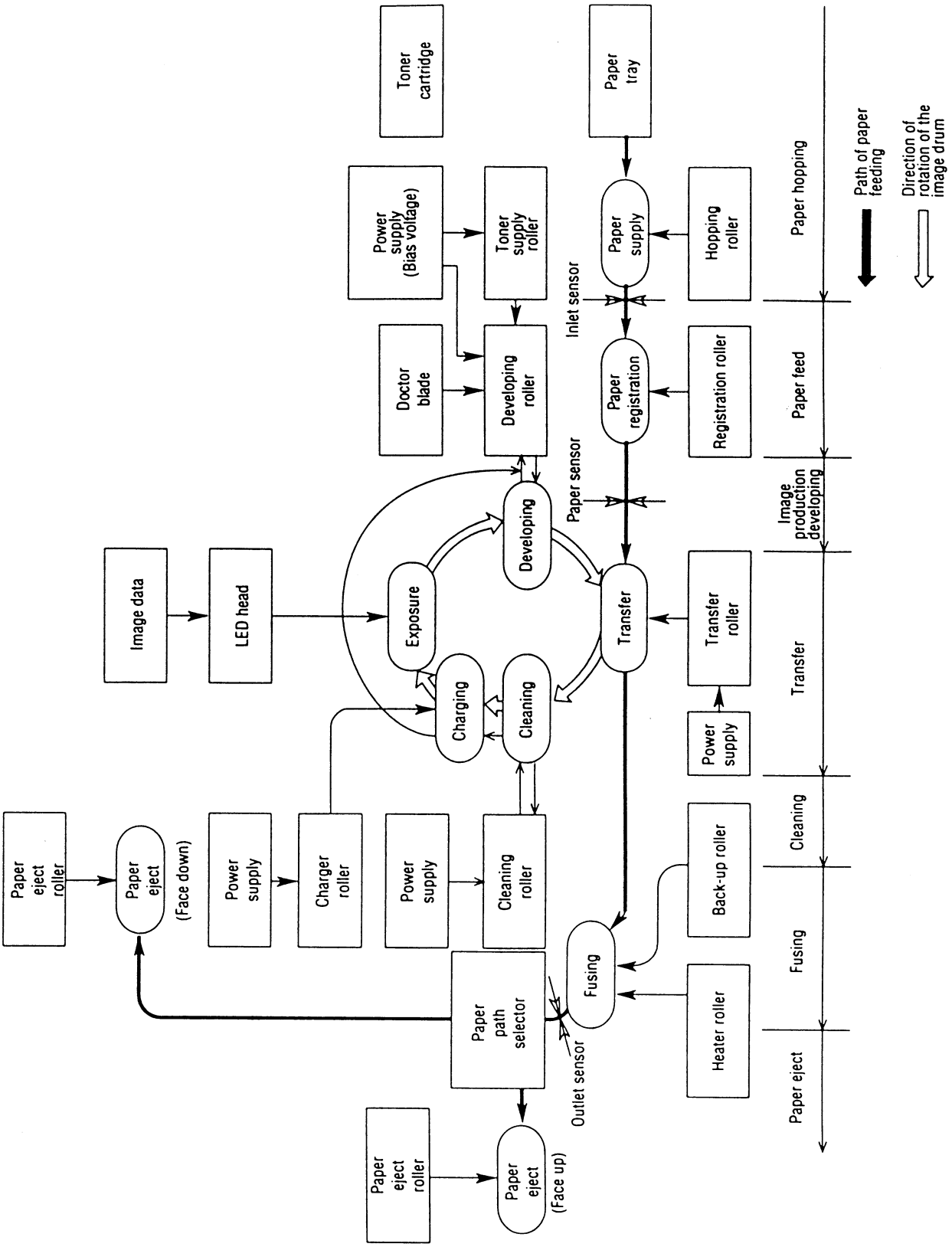
Toner cartridge
Paper tray
Power supply (Bias voltage)
Toner supply roller
Paper supply
Hopping roller
Paper hopping
Path of paper feeding
Direction of rotation of the image drum
Doctor blade
Developing roller
Inlet sensor
Paper registration
Registration roller
Paper feed
Paper sensor
Image production developing
Image data
LED head
Exposure
Developing
Transfer
Transfer roller
Transfer
Charging
Cleaning
Power supply
Paper eject roller
Paper eject
(Face down)
Power supply
Charger roller
Power supply
Cleaning roller
Back-up roller
Cleaning
Paper path selector
Fusing
Heater roller
Fusing
Outlet sensor
Paper eject roller
Paper eject
(Face up)
Paper eject

Figure 2-6

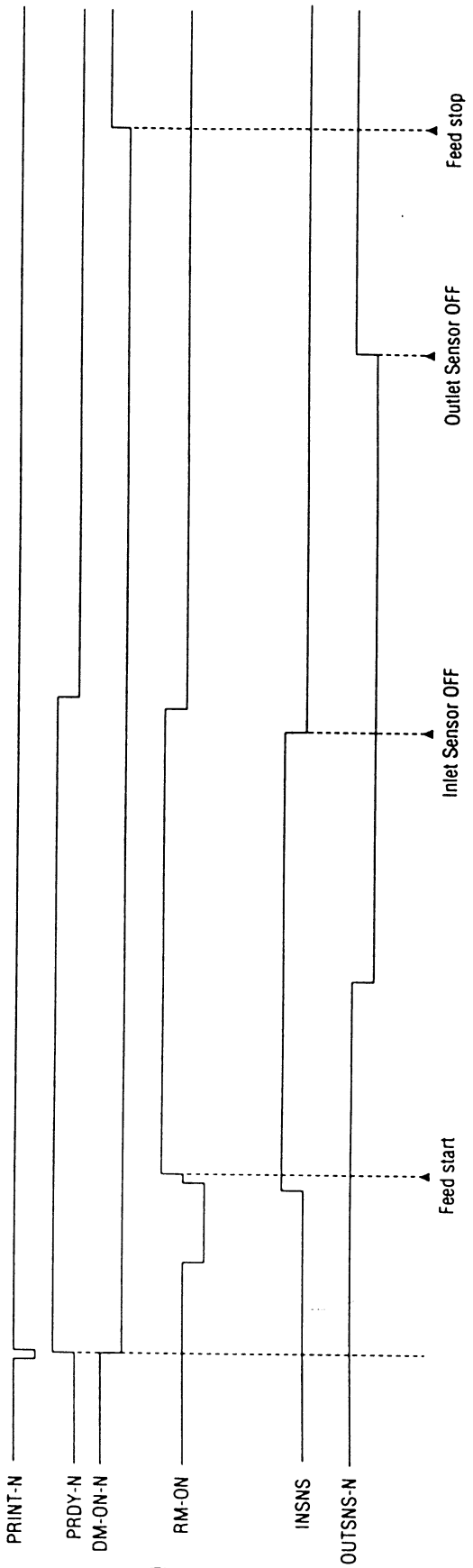
PRINT-N
PRDY-N
DM-ON-N
RM-ON
INSNS
OUTSNS-N
Feed start
Inlet Sensor OFF
Outlet Sensor OFF
Feed stop

Figure 2-7

2.4.3 Process Operation Descriptions

(1) Hopping and Feeding

Hopping and feeding motions are actuated by a single registration motor in the mechanism as shown below:

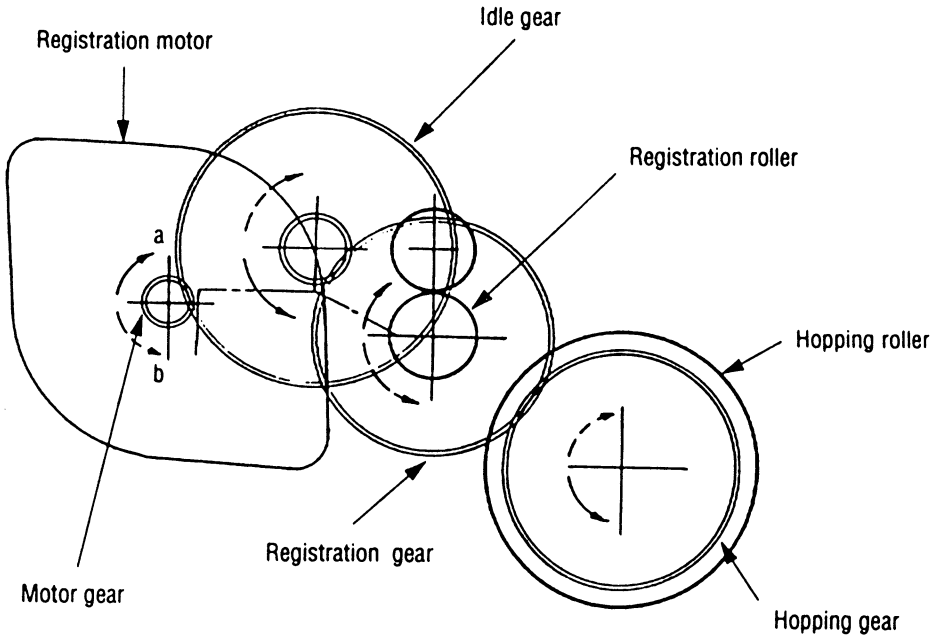

The registration motor turning in direction "a" drives the hopping roller. The registration motor turning in direction "b" drives the registration roller. The registration and hopping gears have one-way bearing, so turning any of these gears in the reverse direction will not transmit the motion to the corresponding roller.

(a) Hopping

1 For hopping, the registration motor turns in direction "a" (CW direction) and drives the hopping roller to advance the paper until the inlet sensor turns on (in this case, the registration gear also turns, but the registration roller is prevented from turning by the one-way bearing).

2 After inlet sensor is turned on by the paper advance, the paper is further advanced to a predetermined distance until the paper hits the registration roller (the skew of the paper can thus be corrected).

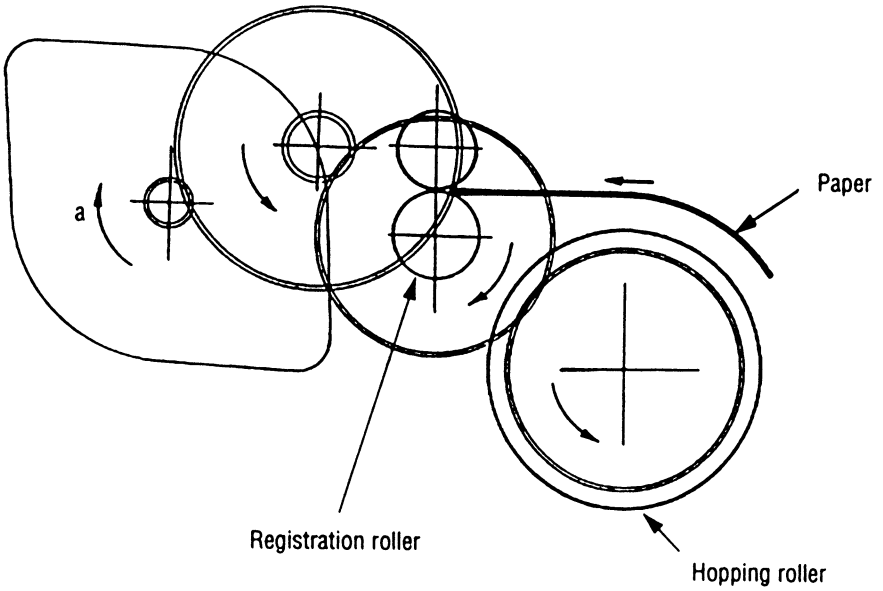

(b) Feeding

1 When hopping is completed, the registration motor turning in direction "b" (CCW direction) drives the registration roller to advance the paper (in this case, the hopping gear also turns, but the hopping roller is prevented from turning by the one-way bearing).

2 The paper is further advanced, synchronization to the print data.

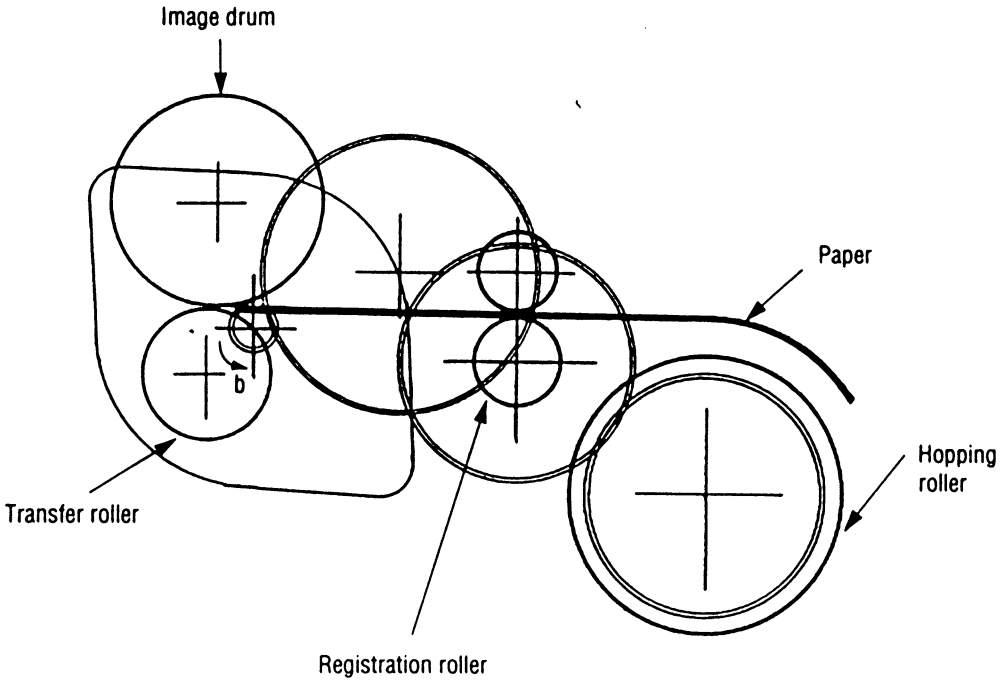

(3) Exposure

Light emitted by the LED head irradiates the image drum surface with a negative charge. The surface potential of the irradiated portion of the image drum drops, forming an electrostatic latent image associated with the image signal.

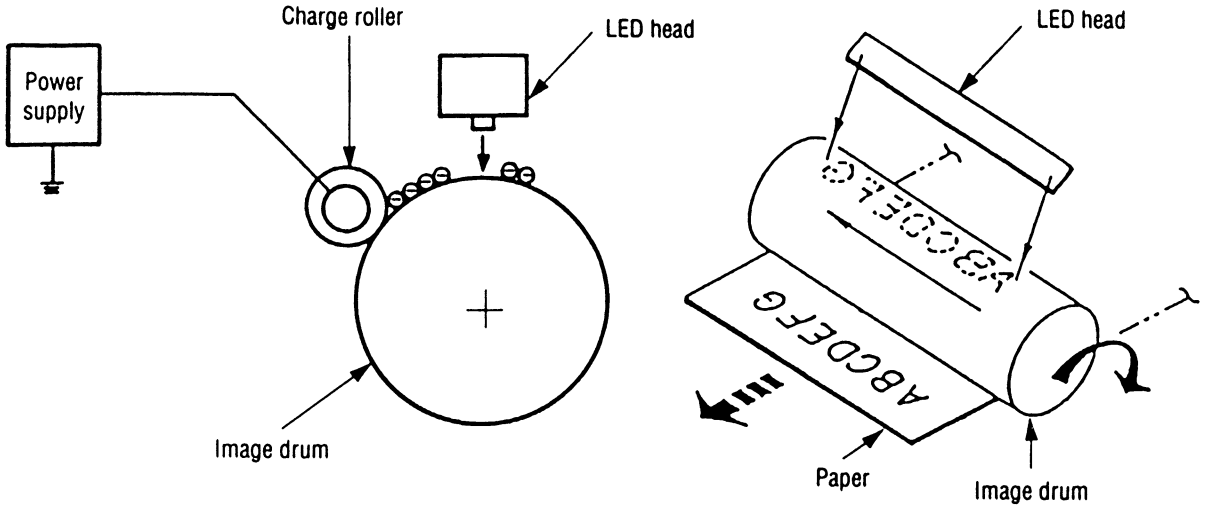

The image drum is coated with an underlayer (UL), a carrier generation layer (CGL), and carrier transfer layer (CTL) on aluminum base. The organic photo-conductor layer (OPC), comprising CTL and CGL, is about 20 μm thick.

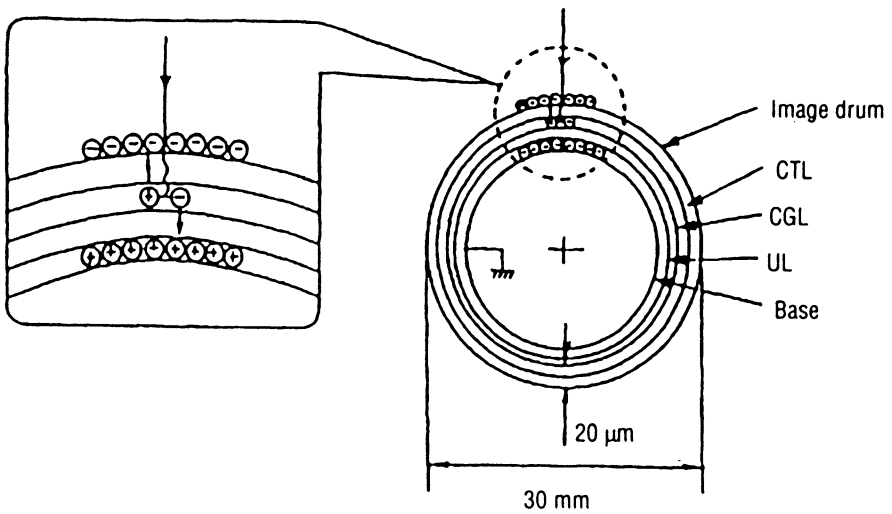

The image roller surface is charged to about –750 V by the contact charge of the charge roller.

When the light from the LED head irradiates the image drum surface, the light energy generates positive and negative carriers in the CGL. The positive carriers are moved to the CTL by an electrical field acting on the image drum. Likewise, the negative carriers flow into the aluminum layer (ground).

The positive carriers moved to the CTL combine with the negative charges on the image drum surface accumulated by the contact charge of the charge roller, lowering the potential on the image drum surface. The resultant drop in the potential of the irradiated portion of the image drum surface forms an electrostatic latent image on it. The irradiated portion of the image drum surface is kept to about –100 V.

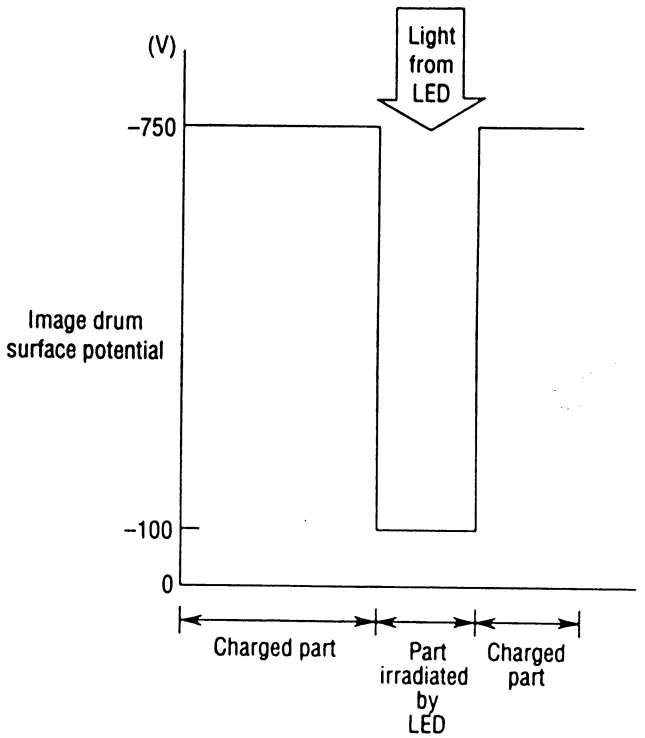

(4) Developing

Toner is attracted to the electrostatic latent image on the image drum surface, converting it into a visible toner image. Developing takes place through the contact between the image drum and the developing roller.

1 As the toner supply roller rotates while rubbing on the developing roller, a friction charge is generated between the developing roller and the toner, allowing the toner to be attracted to the developing roller (the developing roller surface is charged positive and the toner, negative).

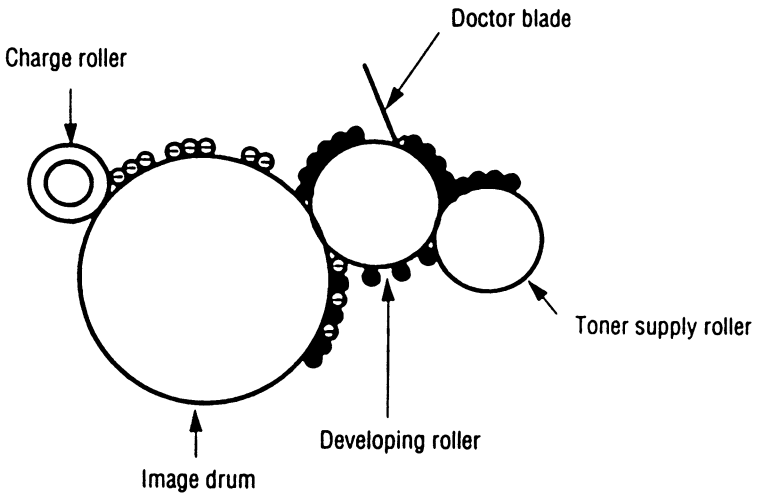

2 The toner attracted to the developing roller is scraped off by the doctor blade, forming a thin coat of toner on the developing roller surface.

3 Toner is attracted to the exposed portion (low-potential part) of the image drum at the contact of the image drum and the developing roller, making the electrostatic latent image visible.

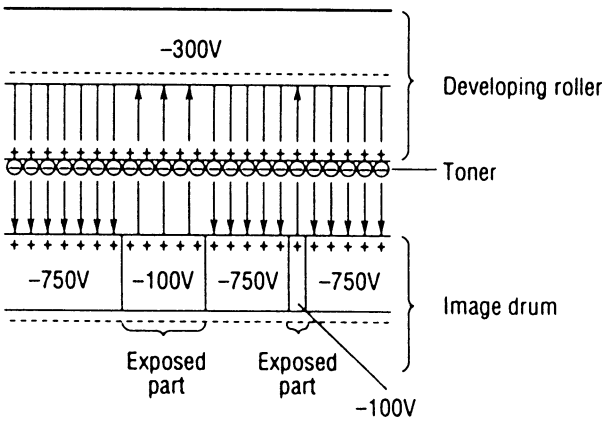

An illustration of activities at the contact point of the image drum surface and the developing roller (arrow marks denote the direction of the electric field).

Note: The bias voltage required during the developing process is supplied to the toner supply roller and the developing roller, as shown in the diagram below. –450 VDC is supplied to the toner supply roller, –300 VDC to the developing roller.

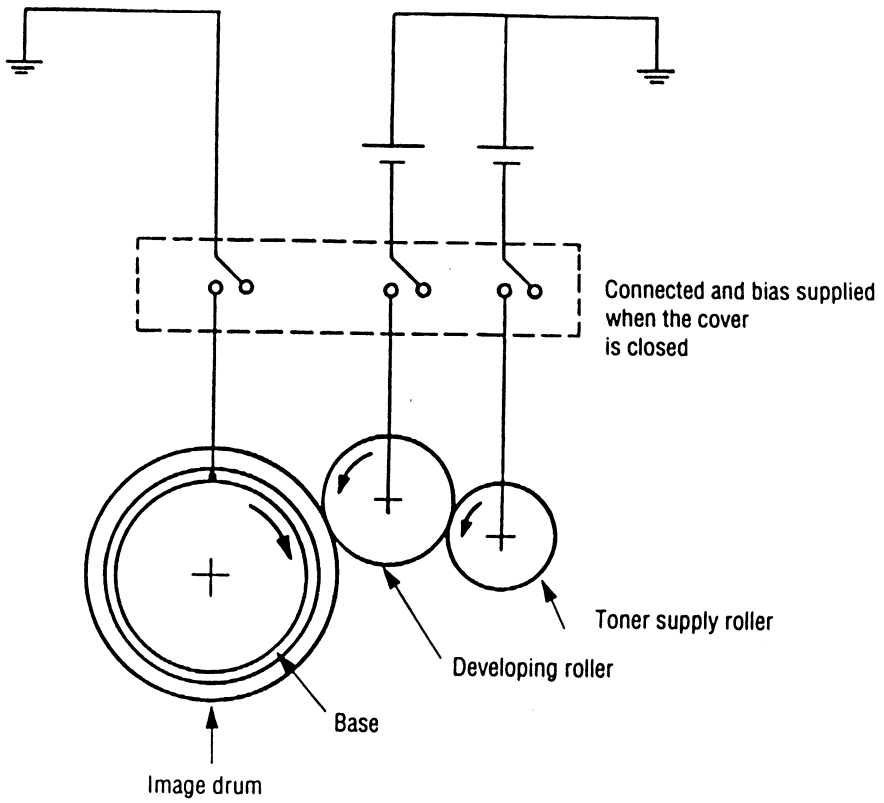

(5) Transfer

The transfer roller is composed of conductive sponge material, and is designed to get the image drum surface and the paper in a close contact.

Paper is placed over the image drum surface, and the positive charge, opposite in polarity to that of the toner, is applied to the paper from the reverse side.

The application of a high positive voltage from the power supply to the transfer roller causes the positive charge inducement on the transfer roller surface, transferring the charge to the paper as it contacts the transfer roller. The toner with negative charge is attracted to the image drum surface, and it is transferred to the upper side of the paper due to the positive charge on the reverse side of the paper.

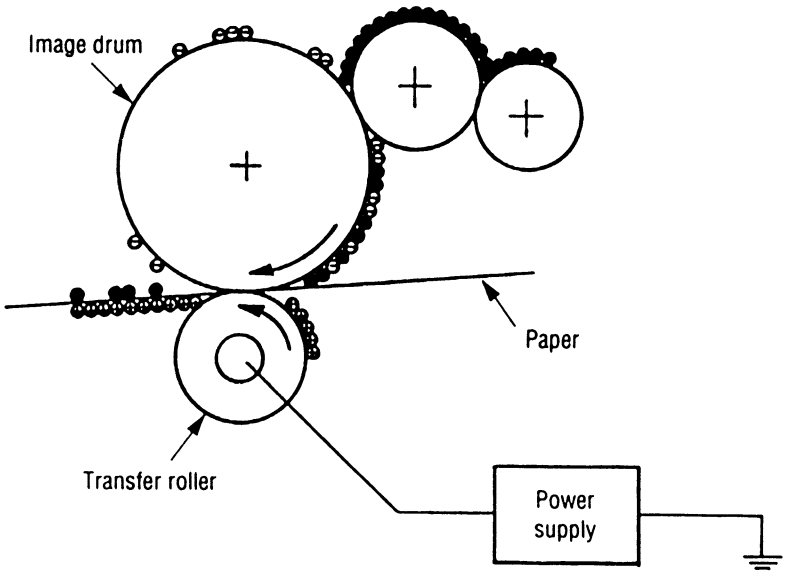

(6) Fusing

When the image transfer is completed, the toner image is fused to the paper by heat and pressure as the paper with unfused toner image passes between the heater roller and the back-up roller. The heater roller with Teflon coating incorporates a 400W heater (Halogen lamp), which heats the heat roller.

A thermistor which is in contact with the heater roller regulates the temperature of the heater roller at a predetermined level (about 165°C). A safety thermostat cuts voltage supply to the heater off by opening the thermostat in the event of abnormal temperature rises.

The back-up roller is held under a pressure of 3.8 kg applied by the pressure spring on each side.

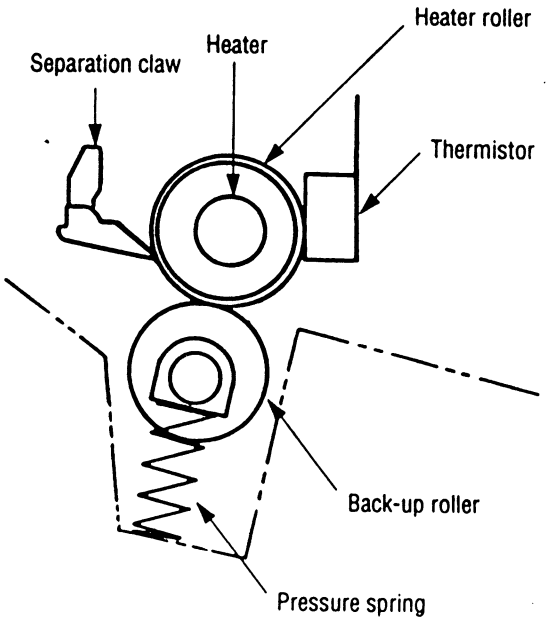

(7) Cleaning

When the transfer is completed, the residual toner left on the image drum is attracted to the cleaning roller temporarily by static electricity, and the image drum surface is cleaned.

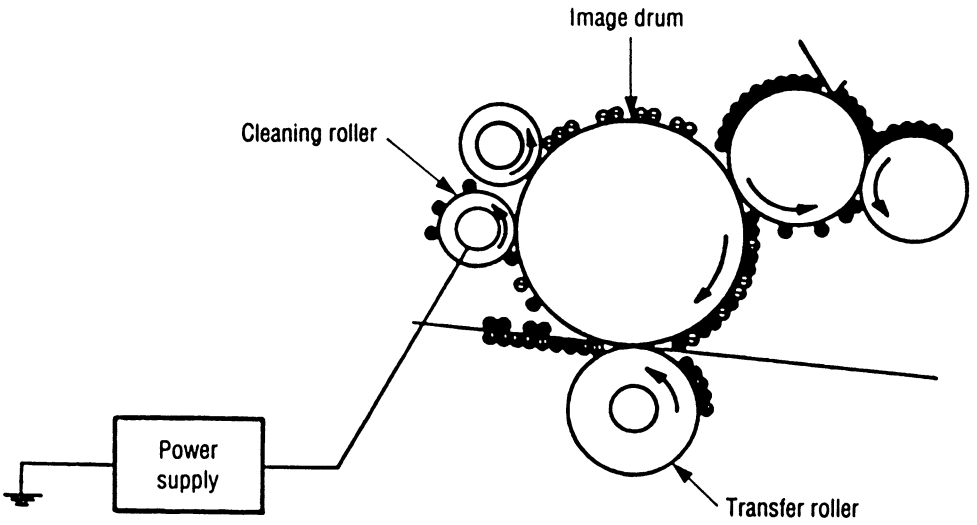

(8) Cleaning of rollers

The charge, transfer and cleaning rollers are cleaned for the following cases:

- Warming up when the power is turned on.
- Warming up after the opening and closing of the cover.
- When the number of sheets accumulated reaches 10 or more, and the printout operation ends.
- User initiated.

Changes in bias voltage applied to each roller moves the attaching toner off the roller to the image drum and returns it to the developer.

2.5 Paper Jam Detection

The paper jam detection function monitors the paper condition when the power is turned on and during printing. When any of the following conditions arises, this function interrupts the printing process. If any of the following errors is encountered, printing can be recovered by removing the jammed paper (by opening the upper cover, removing the jammed paper and closing the upper cover).

Error	Cause of error
Paper input jam	• The paper is in contact with the inlet sensor when the power is turned on. • After hopping operation is attempted three times, the leading edge of the paper does not reach the inlet sensor.
Paper feed jam	• The paper is in contact with at the paper sensor when the power is turned on. • The leading edge of the paper does not reach the paper sensor within a predetermined distance since the paper has reached the inlet sensor. • The trailing edge of the paper does not pass over the paper sensor within a predetermined distance after the same has passed over the inlet sensor. • The leading edge of paper does not reach the outlet sensor within a predetermined distance after the paper has reached the paper sensor.
Paper exit jam	• The paper is in contact with the outlet sensor when the power is turned on. • The paper does not pass over the outlet sensor within a predetermined distance after the leading edge of the paper has reached the outlet sensor. • The paper size check for manual feeding finds that the paper size is free size.
Paper size error	• The size of the paper is monitored by the inlet sensor 1. The paper is not detected by the inlet sensor 1 within predetermined distance. • The inlet sensor 2 detects that the size of the loaded paper is A4 or larger, or smaller than A4. The detected paper size differs from the paper size set by command or menu. • The paper size check for manual feeding finds that the paper size is free size.

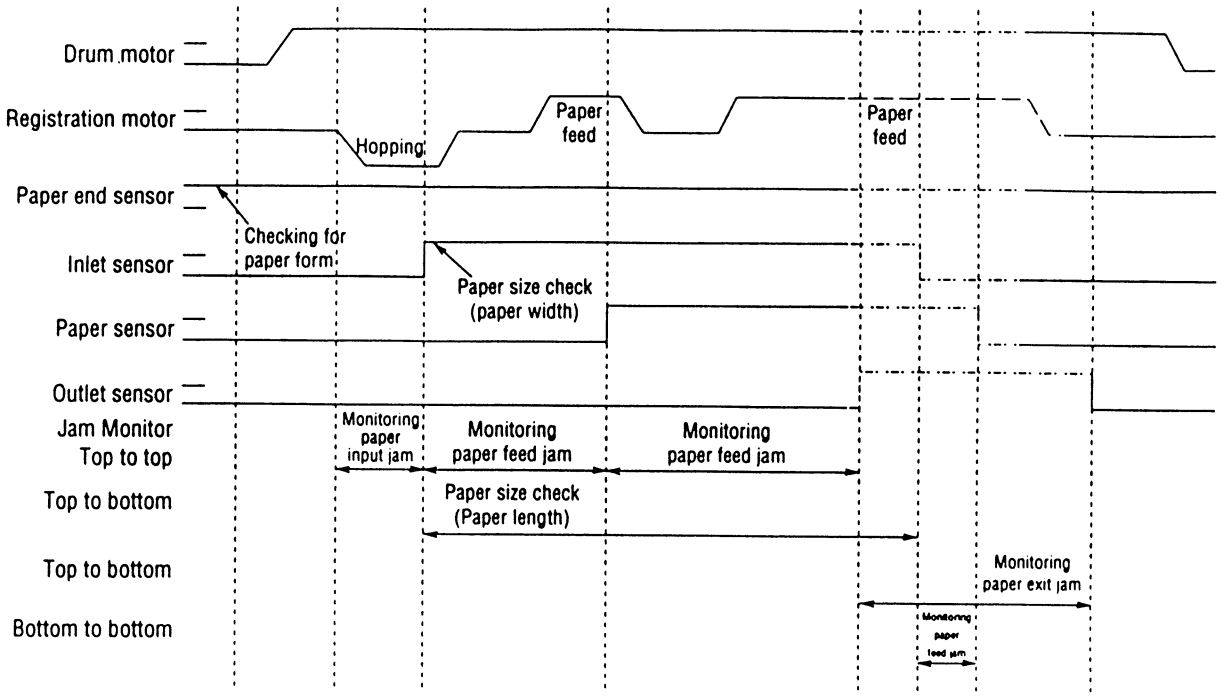

Paper Feed Timing Chart

Paper Feed Check List

Type of error	Monitor	Standard value	Error	
			Plus	Minus
Paper feed error	Hopping start to Inlet sensor on	72.0	36.0	-
Paper feed jam	Inlet sensor on to Write sensor on	20.0	20.0	-
Paper feed jam	Write sensor on to Outlet sensor on	140.5	25.0	-
Paper size error	Inlet sensor on to Inlet sensor off	Depends on the paper length	45.0	45.0
Paper exit jam	Outlet sensor on to Outlet sensor off	Depends on the paper length	45.0	45.0
Paper feed jam	Inlet sensor off to Write sensor off	22.2	22.0	-

Unit : mm

Note: Hyphen "-" in the table represent "no check is done."

Paper Length List

Type	Paper length	Check range	
		Min.	Max.
A4	297.0	252.0	342.0
A5	210.0	165.0	255.0
B5	257.0	212.0	302.0
LETTER	279.4	234.4	324.4
LEGAL 13	330.2	285.2	375.2
LEGAL 14	355.6	310.6	400.6
EXEC	266.7	221.7	311.7
A6	148.0	103.0	193.0
Monarch	190.5	145.5	235.5
COM-9	225.4	180.4	270.4
COM-10	241.3	196.3	286.3
DL	220.0	175.0	265.0
C5	229.0	184.0	274.0
Free	110.0 ~ 355.6	65.0	400.6

Unit : mm

2.6 Cover Open

When the stacker cover is opened, the cover open microswitch on the power/sensor board is turned off to cut +5V supply to the high voltage power supply circuit. This results in the interruption of all high-voltage outputs. At the same time, the CVOPN signal is sent to the control board to notify that the microswitch is off, and the control board carries out the cover open process.

2.7 Toner Low Detection

- Device

The Toner Low Detection device consists of a stirring gear which rotates at a constant rate, a stirring bar and a magnet on the stirring bar. The stirring bar rotation is driven by the link to the protrusion in the stirring gear.

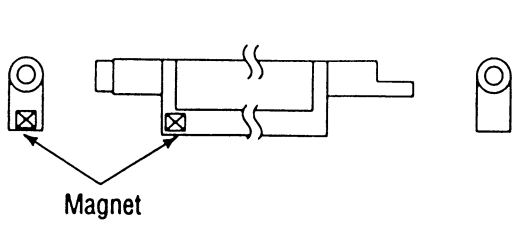

Stirring Bar

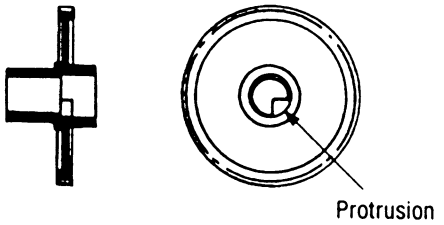

Stirring Gear

- Operation

Toner Low is detected by monitoring the time interval of the encounter of the magnet set on the sensor lever and the magnet on the stirring bar.

Operation during Toner Full state

- The stirring bar is rotated due to the mechanical transmission of energy originating from the interlocking with the stirring gear.
- Even when the magnet on the stirring bar reaches the maximum height, the stirring bar is pushed by the stirring gear, since the other end is being dipped in the toner.

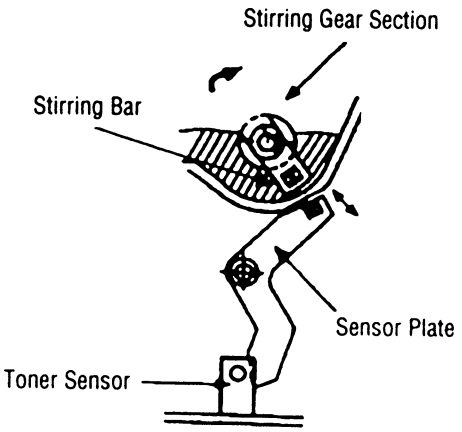

Operation during Toner Low state

- When the stirring bar reaches the maximum height, it falls to the minimum height due to its own weight, since there is no resistance provided by the toner on the other side. Because of this, the time interval during which it is in encounter with the magnet of the sensor lever becomes longer. By monitoring this time interval, Toner Low can be detected.

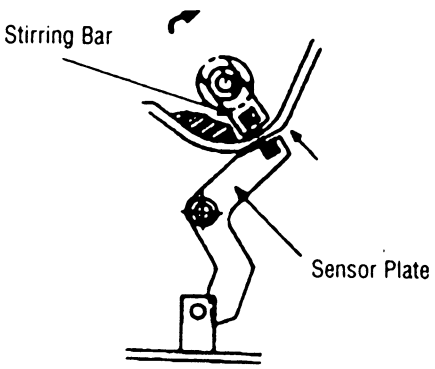

TONER FULL state

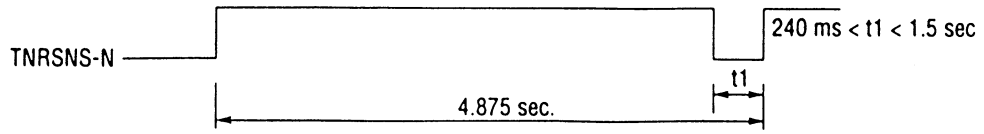

TONER LOW state

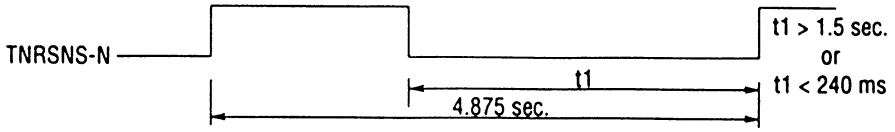

- When the Toner Low state is detected 2 times consecutively, Toner Low is established.
- When the Toner Full state is detected 2 times consecutively, Toner Low is cancelled.
- When there is no change with the toner sensor for 2 cycles (4.875 sec. x 2) or more, then the Toner Sensor Alarm is activated.
- The toner sensor is not monitored while the drum motor is in halt.

3. PARTS REPLACEMENT

3. PARTS REPLACEMENT

The section explains the procedures for replacement of parts, assemblies, and units in the field. Only the disassembly procedures are explained here. For reassembly, reverse the disassembly procedure.

3.1 Precautions for Parts Replacement

(1) Before starting the parts replacement, remove the AC cable and interface cable.

(a) Remove the AC cable in the following procedure:

i) Turn off ("o") the power switch of the printer.
ii) Disconnect the AC inlet plug of the AC cable from the AC receptacle.
iii) Disconnect the AC cable and interface cable from the printer.

(b) Reconnect the printer in the following procedure:

i) Connect the AC cable and interface cable to the printer.
ii) Connect the AC inlet plug to the AC receptacle.
iii) Turn on ("I") the power switch of the printer.

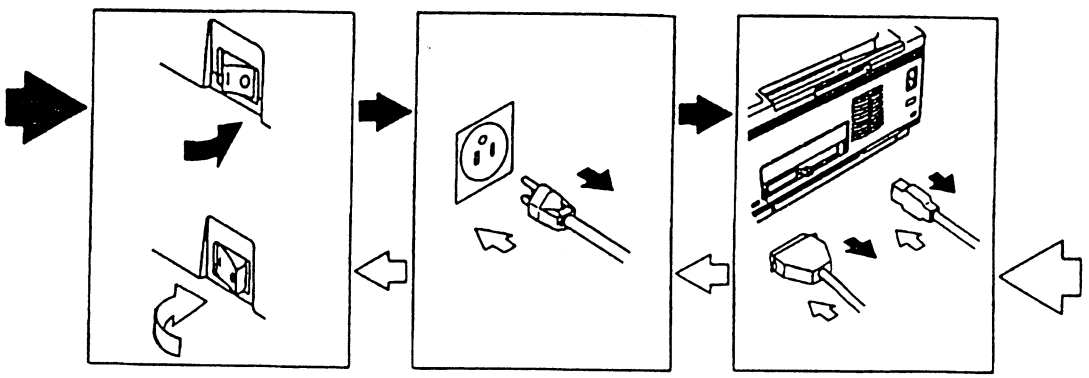

(2) Do not try to disassemble as long as the printer is operating normally.

(3) Do not remove parts which do not need to be touched; try to keep the disassembly to a minimum.

(4) Use specified service tools.

(5) When disassembling, follow the sequence laid out. Parts may be damaged if these sequences are not followed.

(6) Since screws, collars and other small parts are likely to be lost, they should temporarily be attached to the original positions during disassembly.

(7) When handling IC's such as microprocessors, ROM and RAM, or circuit boards, do not wear gloves that are likely to generate static electricity.

(8) Do not place printed circuit boards directly on the equipment or floor.

[Service Tools]

The tools required for field replacement of printed circuit boards and units are listed in Table 3-1.

Table 3-1 Service Tools

No.	Service Tools		Q' ty	Place of use	Remarks
1	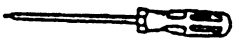	No. 1-100 Philips screwdriver	1	2~2.5 mm screws	
2	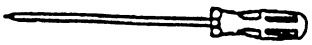	No. 2-100 Philips screwdriver	1	3~5 mm screws	
3		No. 3-100 screwdriver	1		
4	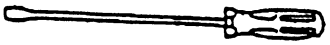	No. 5-200 screwdriver	1		
5	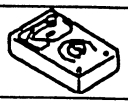	Digital multimeter	1		
6		Pliers	1		
7	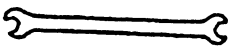	5.0 mm wrench	1		
8		Handy cleaner	1		
9		LED Head cleaner	1	Cleans LED head	
10		Maintenance Utility	1	Adjustment of a printer, etc.	OL600ex

3.2 Parts Layout

This section describes the layout of main parts of the equipment.

[Lower base unit]

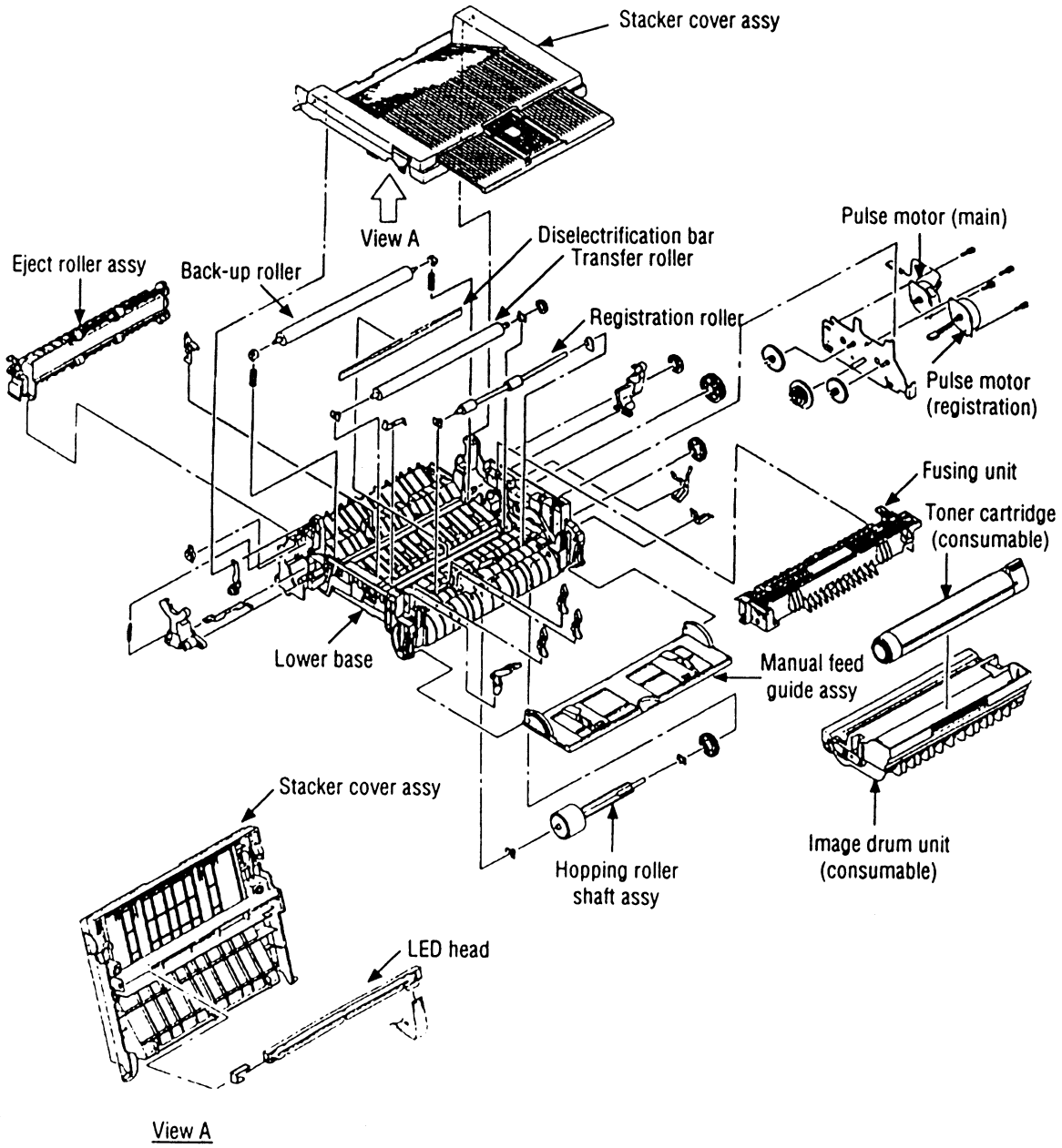

Figure 3-1

[Upper cover unit]

(OL600ex)

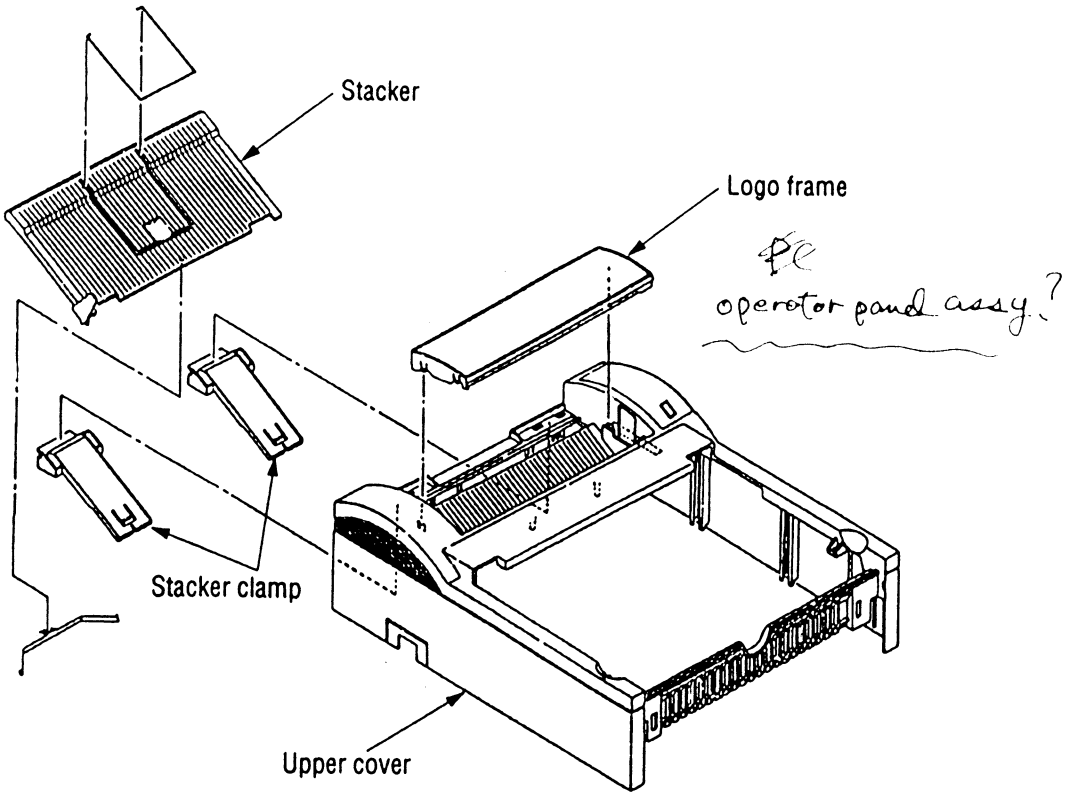

Figure 3-2 (1/2)

(OL610ex)

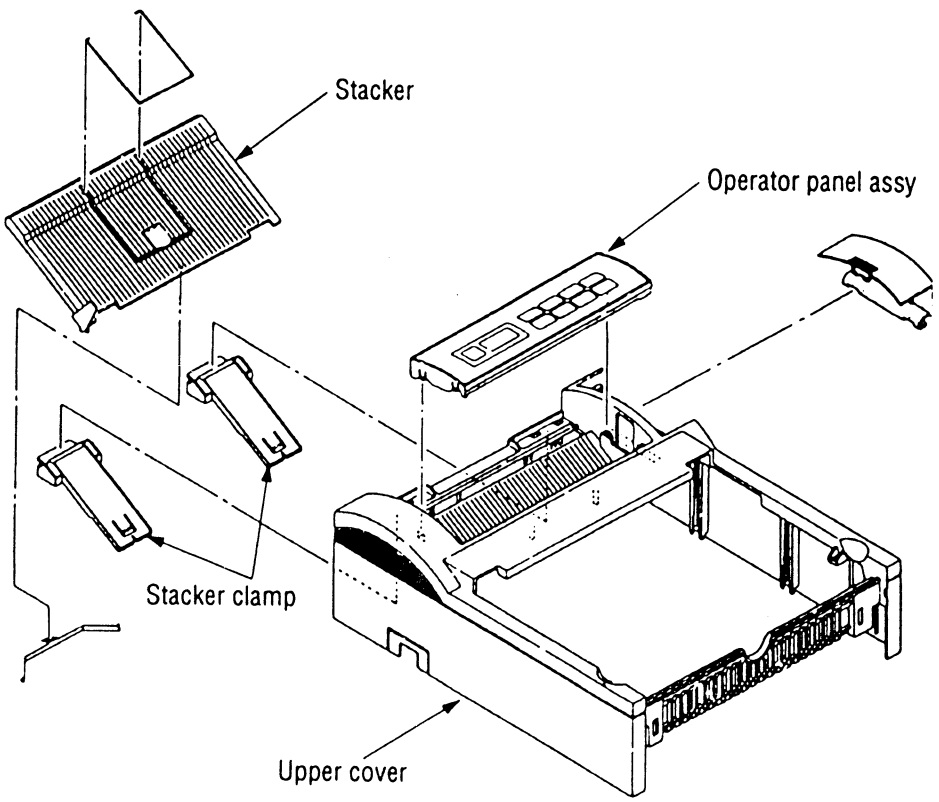

Figure 3-2 (2/2)

[Base unit]

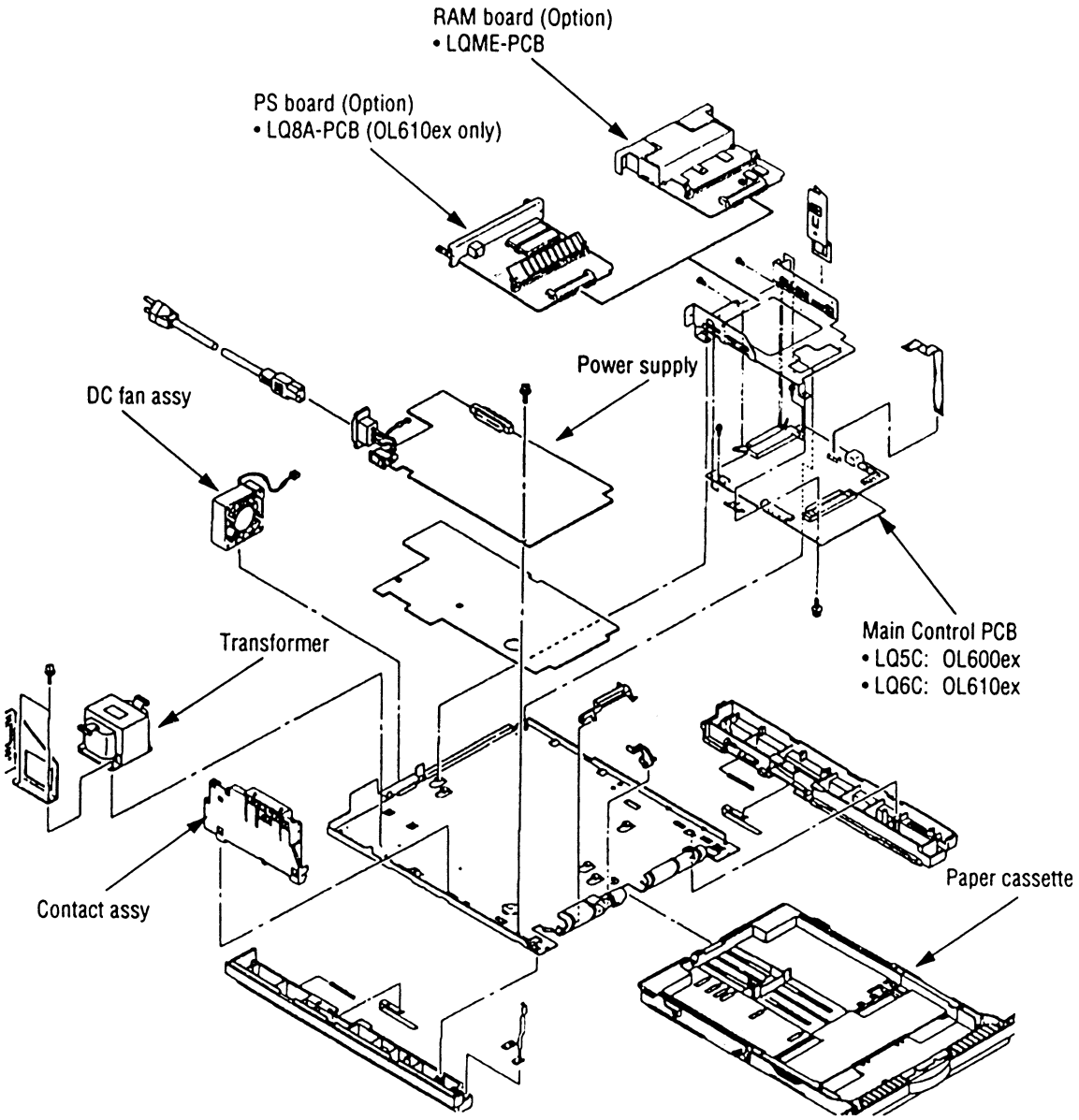

Figure 3-3

3.3 How to Change Parts

This section explains how to change parts and assemblies listed in the disassembly diagram below.

In the parts replacement procedure, those parts marked with the part number inside ● with white letters are RSPL parts.

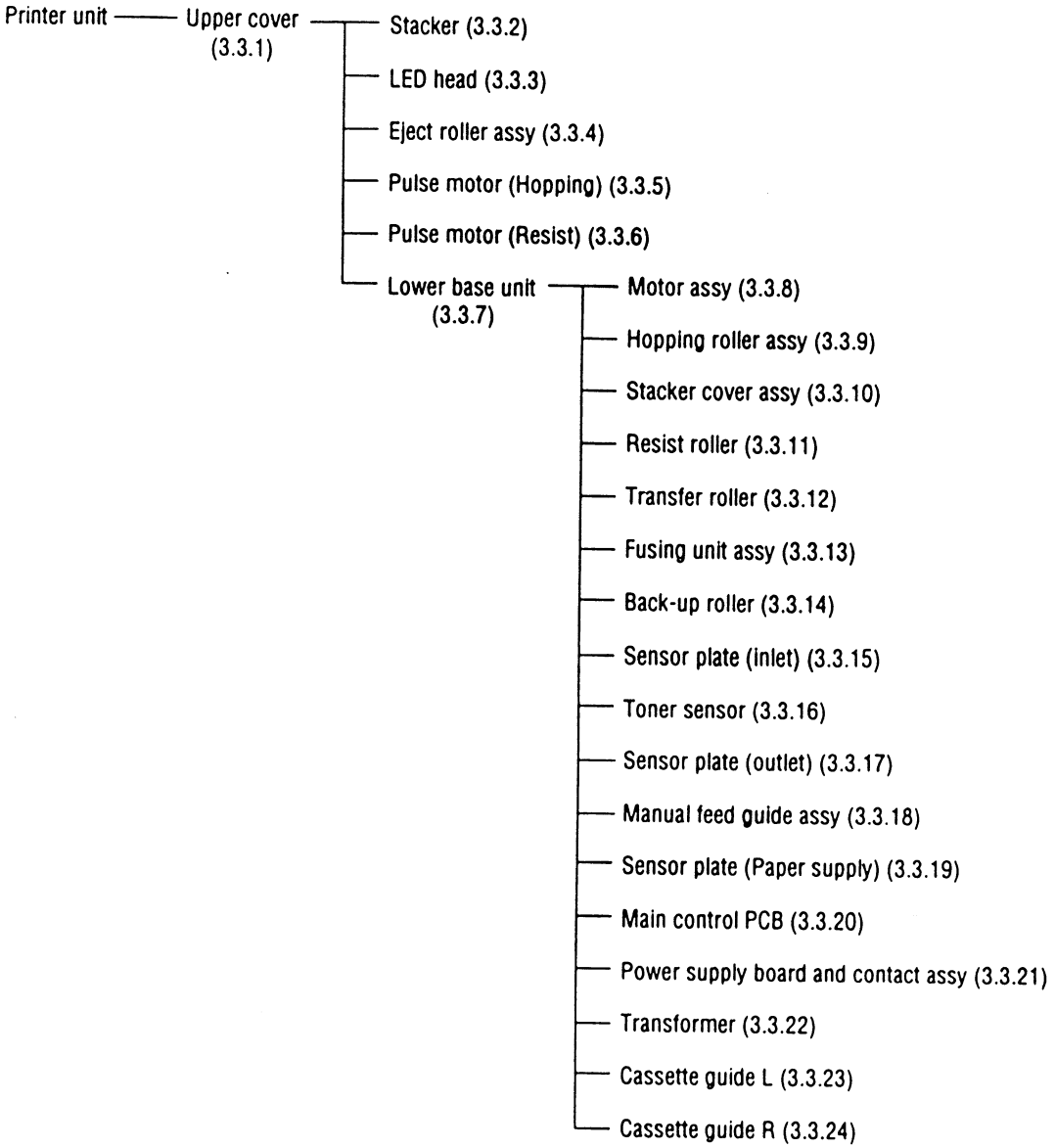

3.3.1 Upper Cover

(1) With the power switch turned off, unplug the AC power cord from the outlet.

(2) Disconnect the interface cable ①.

(3) Remove two thumb screws and remove the PS board (option) ⑭.

(4) Lift the left side of the operator panel assy (or logo frame) ❶ and remove it.

(5) Disconnect the flexible cable ❺ from the connector (CN1) ⑥ of the operator panel PCB ⑥, and put the cable inside the cover. (OL610ex only)

(6) Open the stacker cover assy ❾ by pressing the knobs ⑧ on the left and right sides.

(7) Remove the image drum unit ❿.

(8) Remove two screws ⑪, and open the manual feed guide assy ⓬. Lift the front of the upper cover ⓭ up and release the claws at two locations on the back side. Align the stacker cover ❾ against the diagonal line of the square holes of the upper cover and lift up the upper cover ⓭ slightly, then remove it.

Note: When removing or installing the upper cover, be careful not to damage the cable ❺.

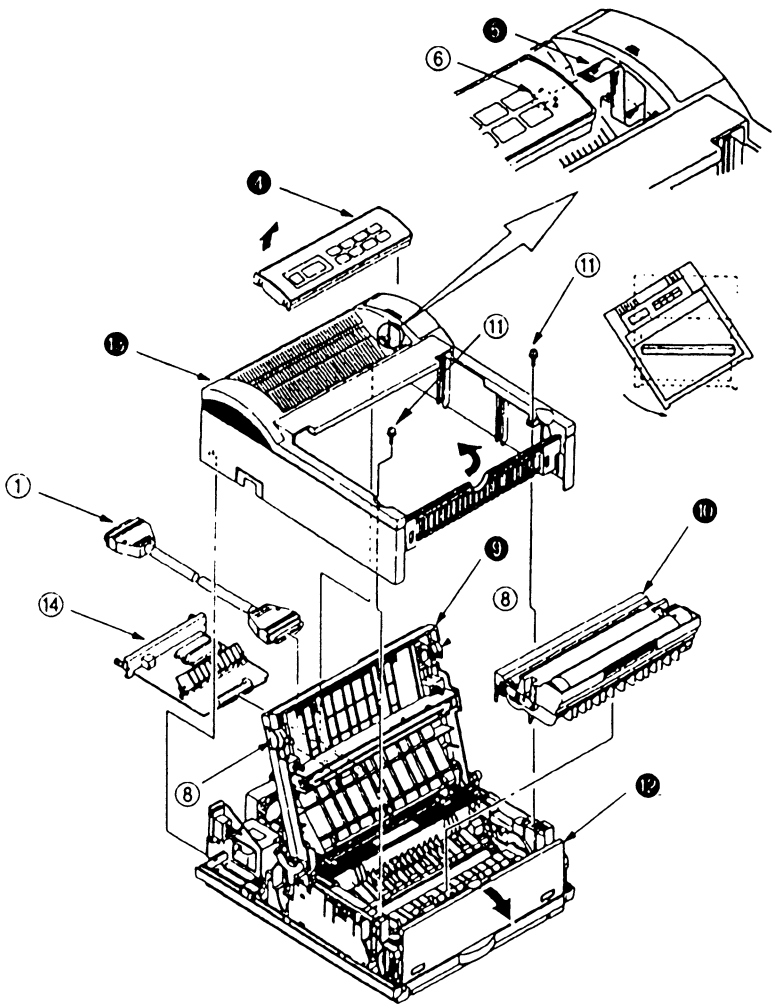

3.3.2 Stacker

(1) Remove the upper cover. (See 3.3.1)

(2) Remove two stacker clamps ❶ and the stacker ❷ by bending the upper cover.

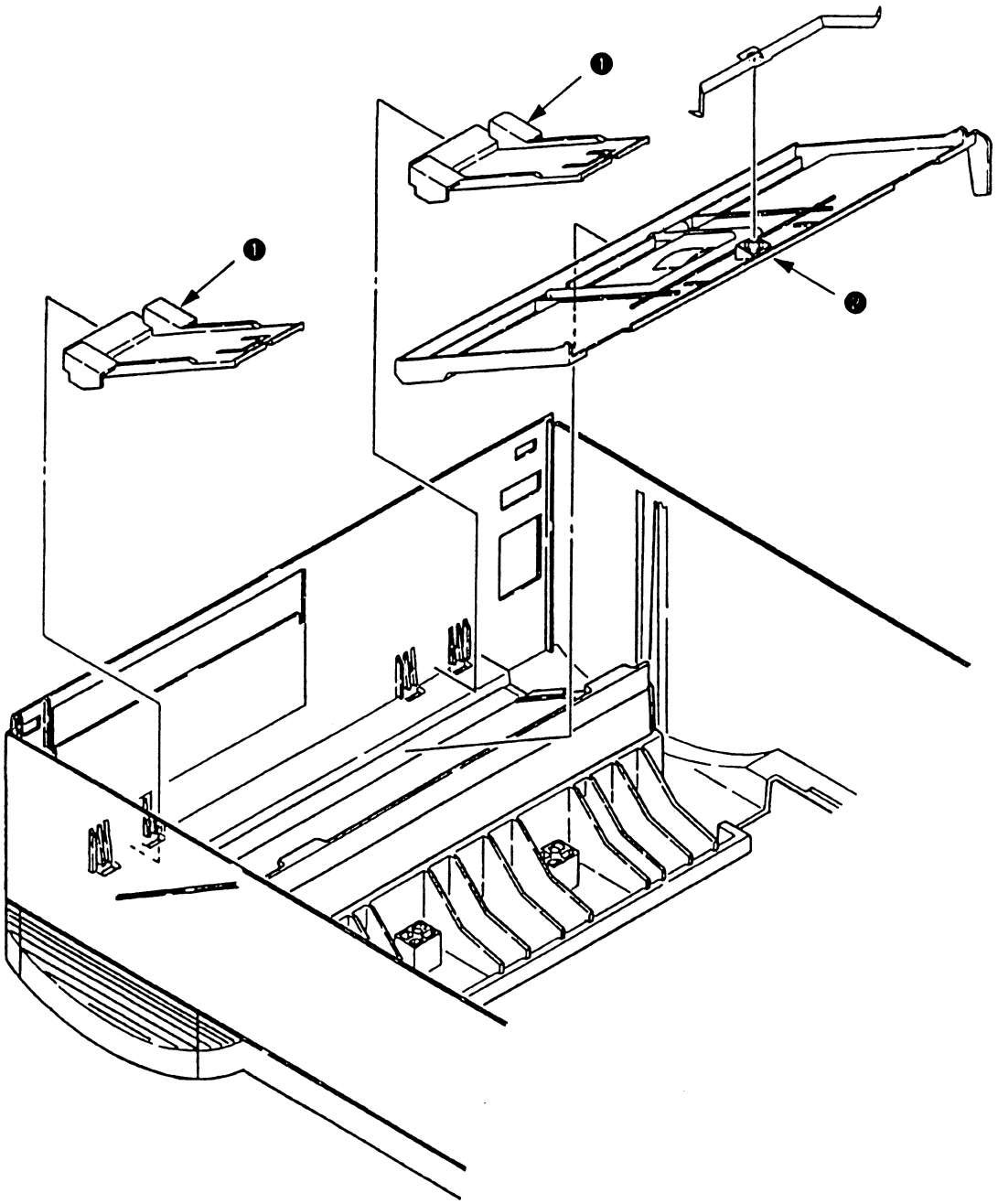

3.3.3 LED Head

(1) Open the stacker cover.

(2) Remove the flexible cable (LED) ❶ from the PC connector ❷ of the LED head ❸.

(3) Remove the LED head by prying the left side free from the retaining clip.
Note: Be careful to not lose the contact (LED) ④.

Note:
- Be sure not to directly touch or push the SLA part of the LED head.
- After mounting the new LED head, set drive time of the LED head according to the marking on the LED head (see 4.3.1 or 4.3.2).
- For the installation of the flexible cable (LED) ❶, install the PC connector ❷ to the flexible cable (LED) ❶ first, then connect the LED head ❸ to the PC connector.
- When installing a new LED head, be careful not to lose the contact (LED) ④.

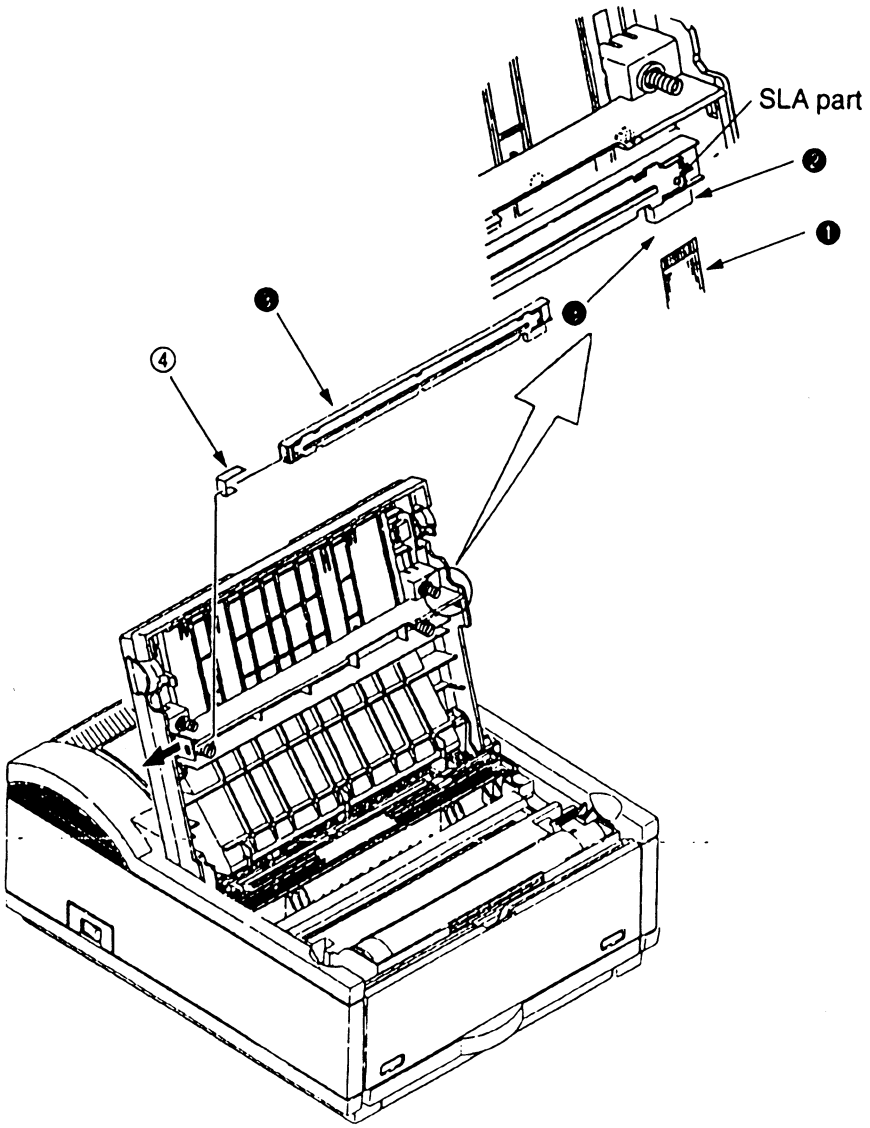

3.3.4 Eject Roller Assy

(1) Remove the upper cover (see 3.3.1).

(2) Press the clamp on the left side of the eject roller assy ❶ in the direction of the arrow. Detach the eject roller assy from the lower base unit ②, and remove it.

Note: When installing the eject roller, verify the proper engagement with the main unit.

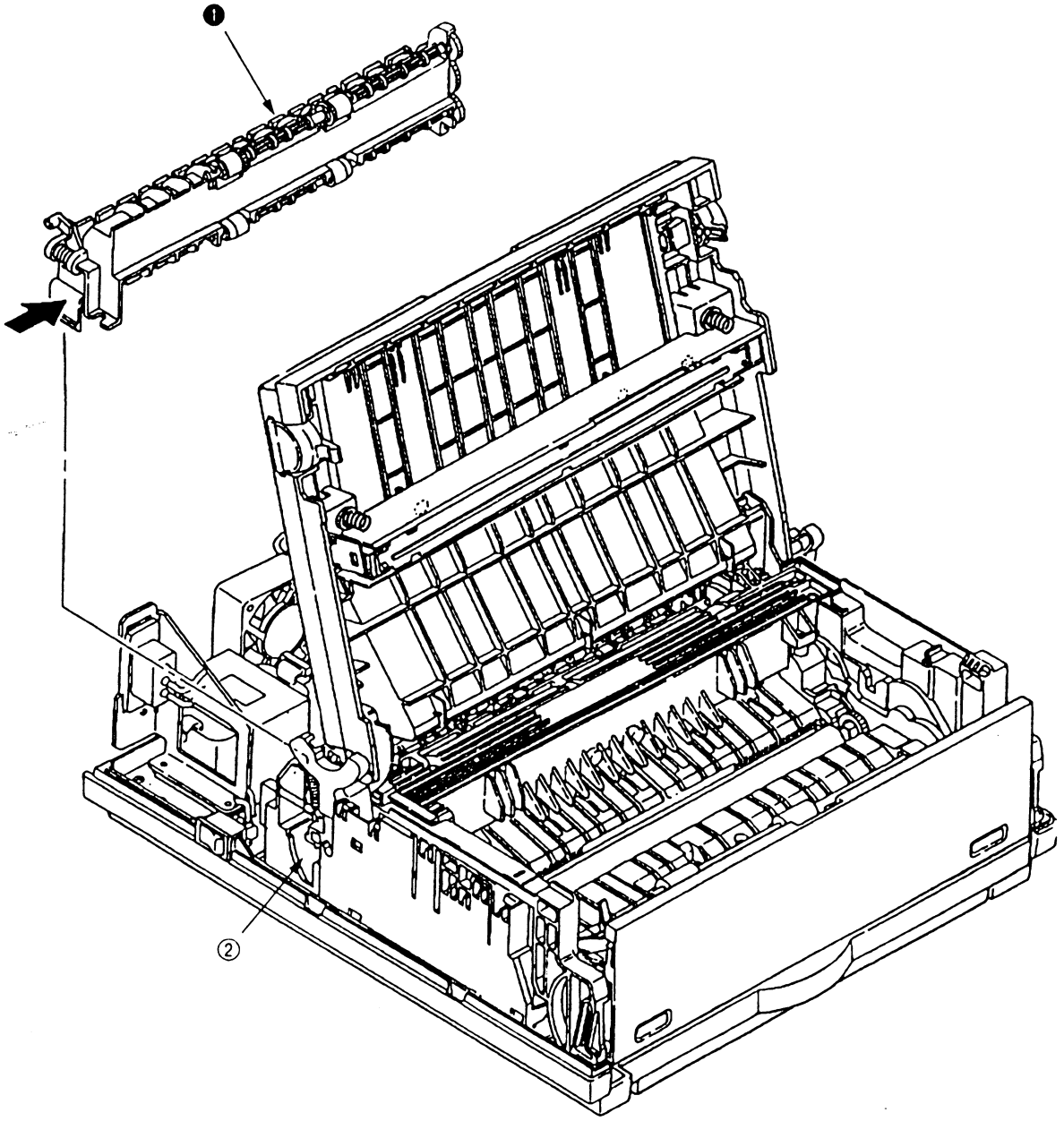

3.3.5 Pulse Motor (Main)

(1) Remove the upper cover (see 3.3.1).

(2) Remove the connector ③ from (CN2) ② of the Main Control PCB ❶.

(3) Remove two screws ④ and remove the pulse motor (main) ❻ from the motor bracket ⑤.

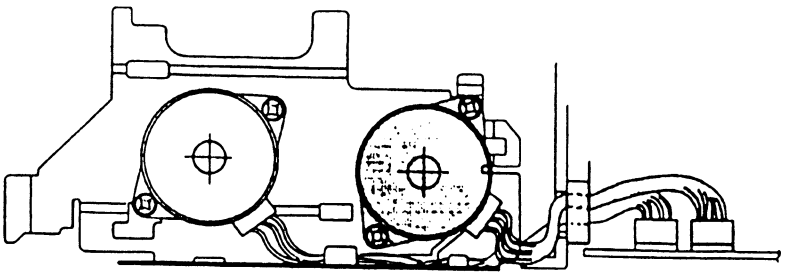

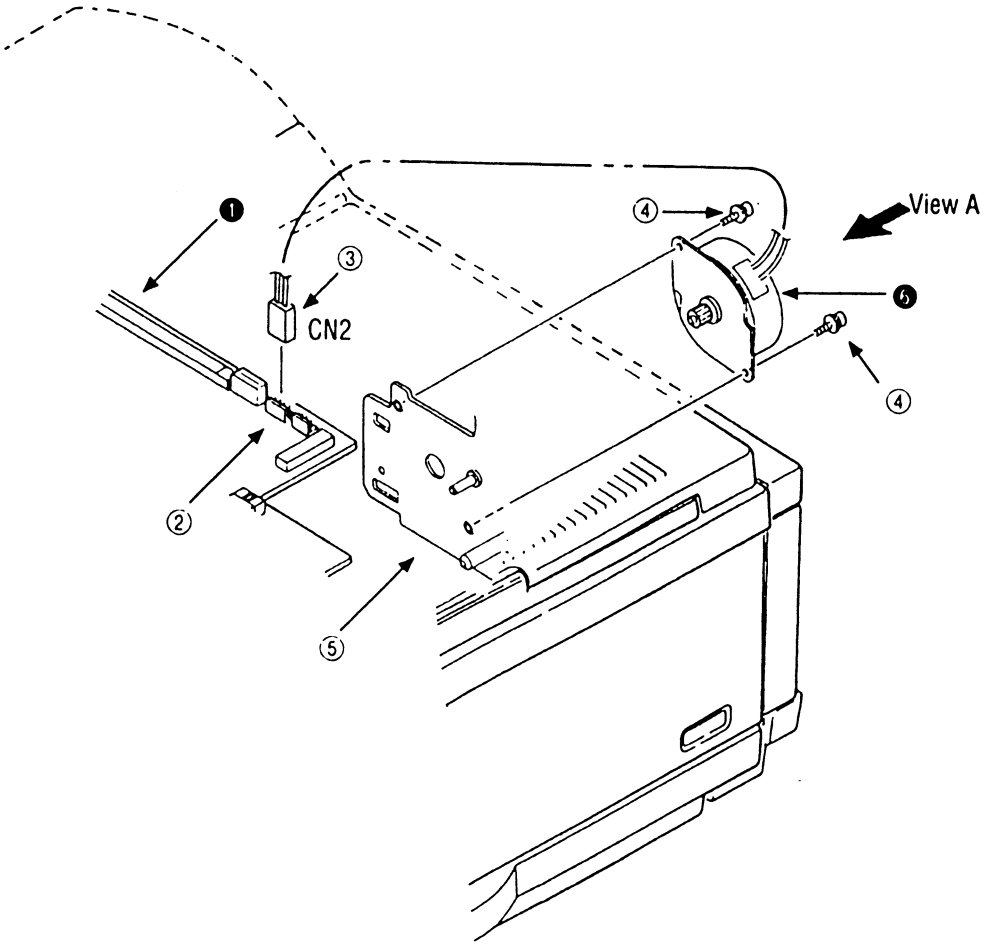

3.3.6 Pulse Motor (Registration)

(1) Remove the upper cover (see 3.3.1).

(2) Remove the connector ③ from (CN3) ② of the Main Control PCB ❶.

(3) Remove two screws ④ and remove the pulse motor (registration) ❻ from the motor bracket ⑤.

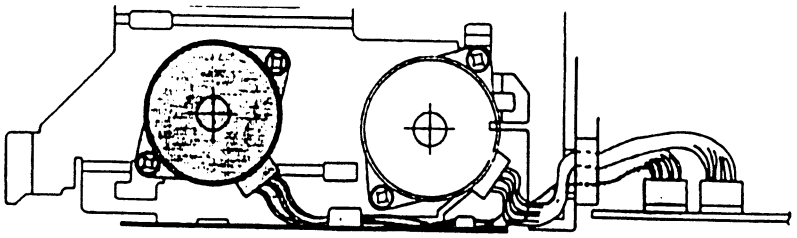

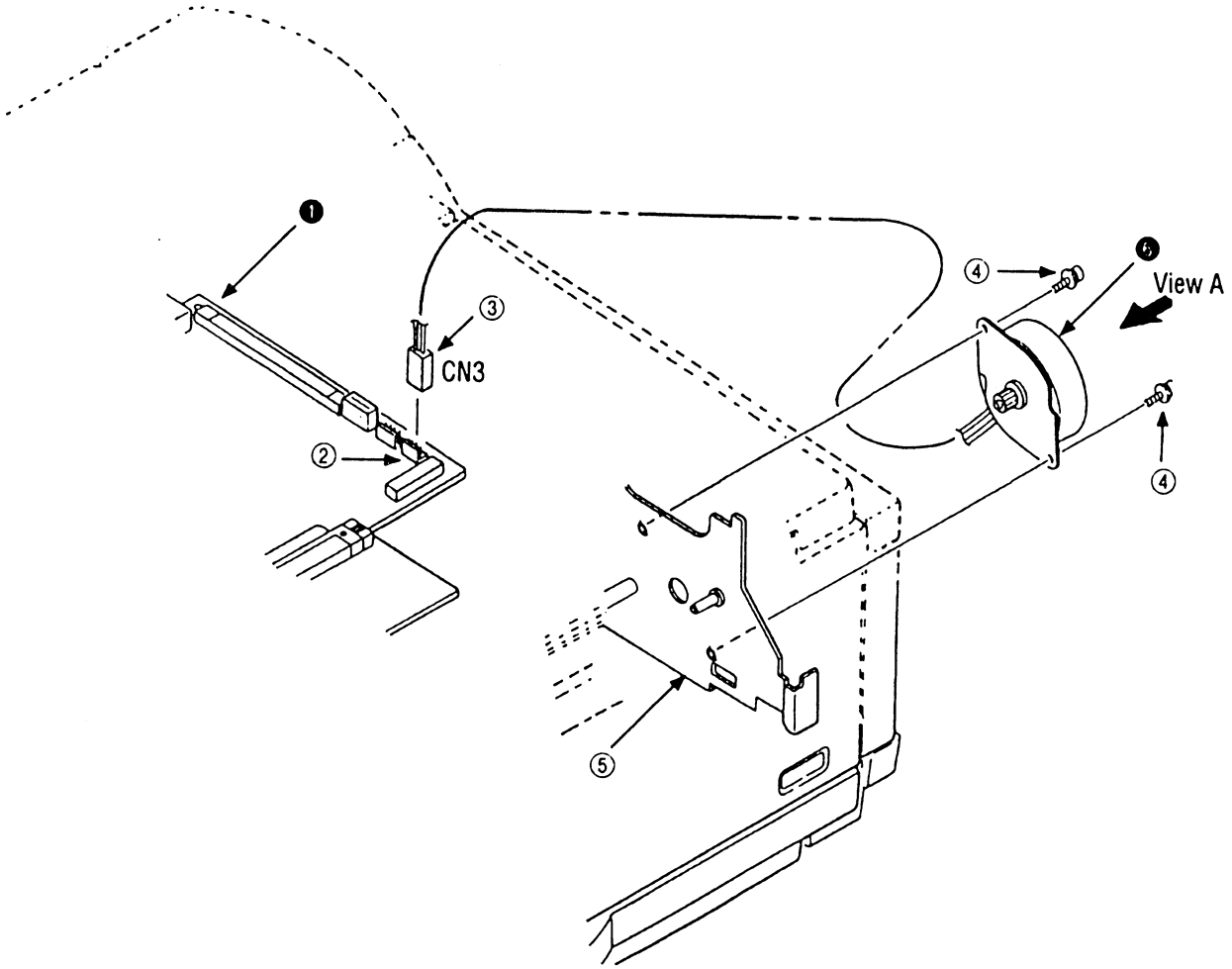

3.3.7 Lower Base Unit

(1) Remove the upper cover (see 3.3.1).

(2) Remove the connecting cables ④ and ⑤ of the pulse motor from the connectors ② and ③ of the Main Control PCB ❶.

(3) Remove the connector ⑥ of the LED head from the Main Control PCB ❶.

(4) Remove seven screws ⑦, then remove the lower base unit ⑧.

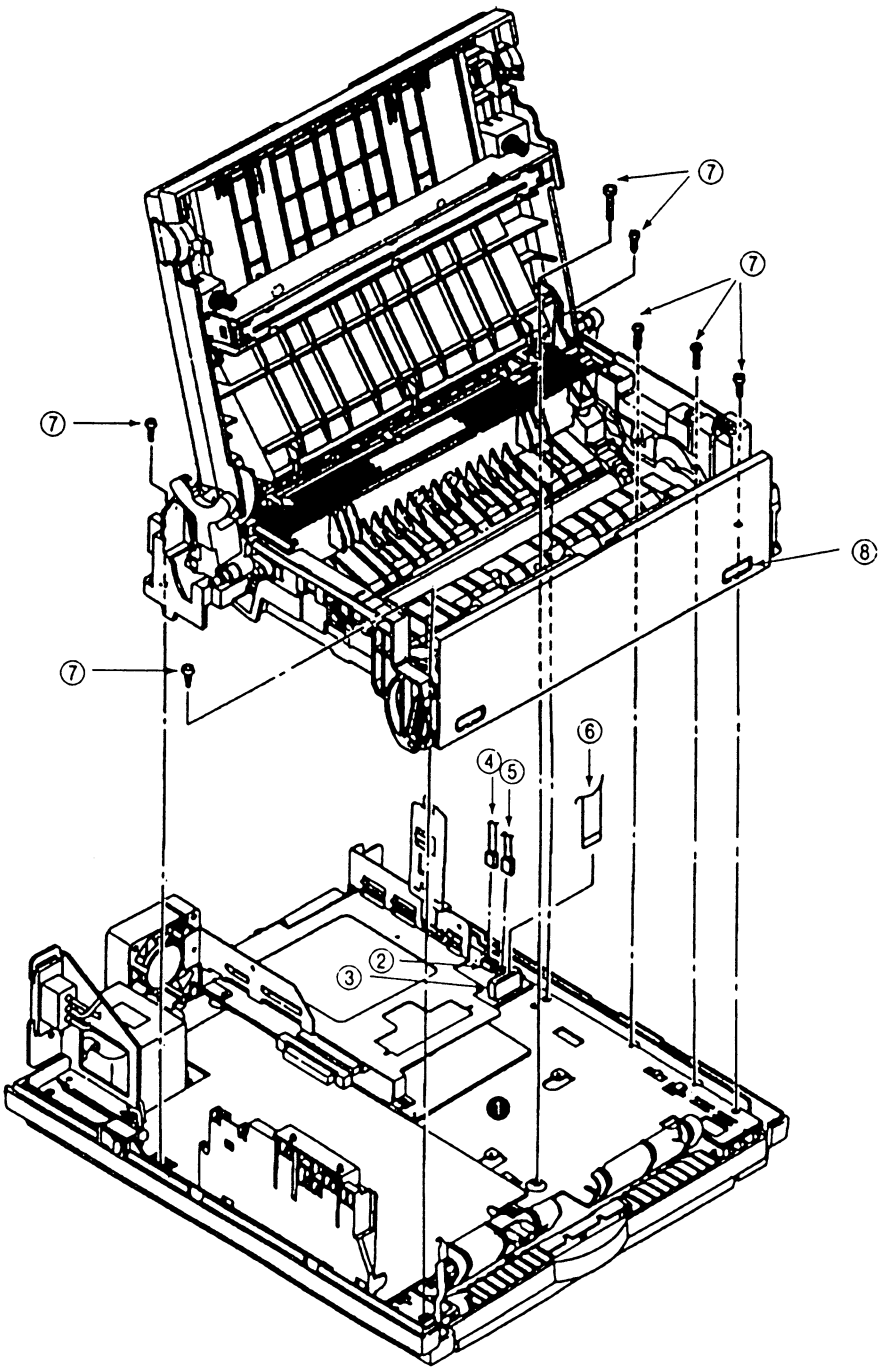

3.3.8 Motor Assy

(1) Remove the upper cover (see 3.3.1).

(2) Remove the lower base unit (see 3.3.7).

(3) Stand the lower base unit on its side as shown, and unlock two clamp levers, then remove the motor assy ①.

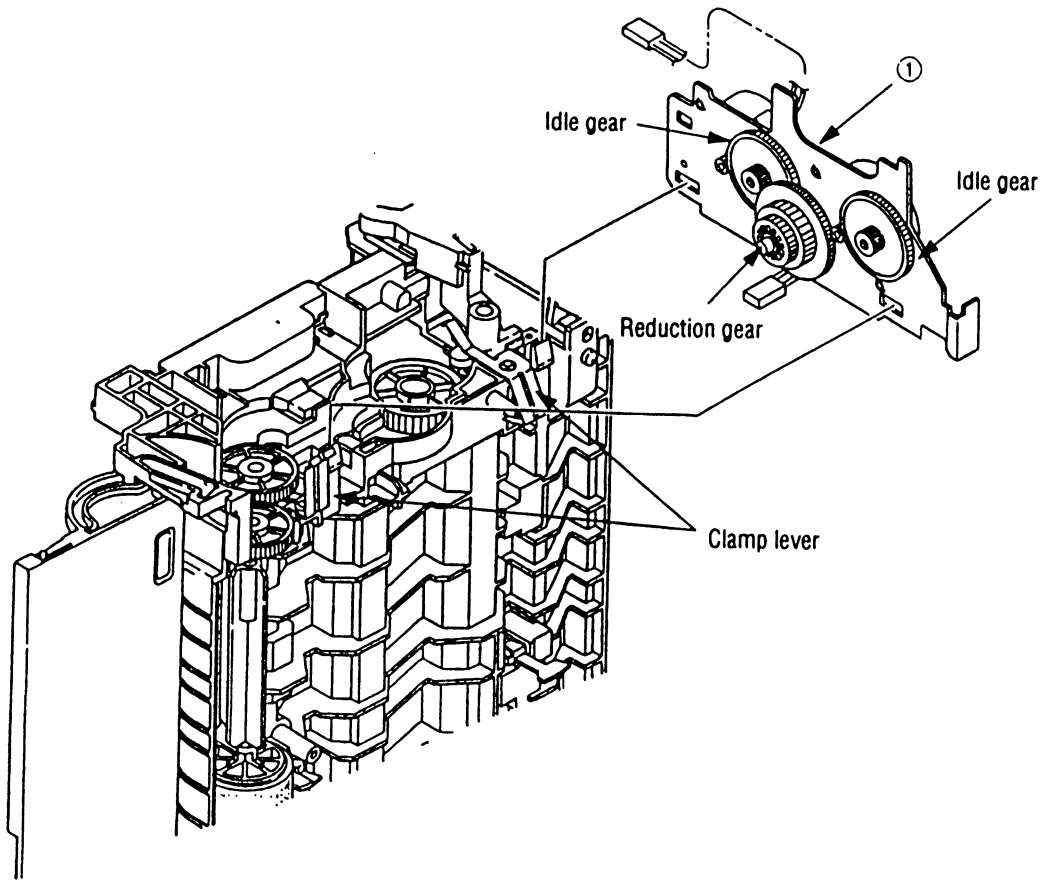

3.3.9 Hopping Roller Assy

(1) Remove the upper cover (see 3.3.1).

(2) Remove the lower base unit (see 3.3.7).

(3) Remove the motor assy (see 3.3.8).

(4) With the lower base unit ① standing on its side, remove the one-way clutch gear ❷ and the bearing (A) ❸, then remove the hopping roller assy ❶ and the bearing (B) ❺.

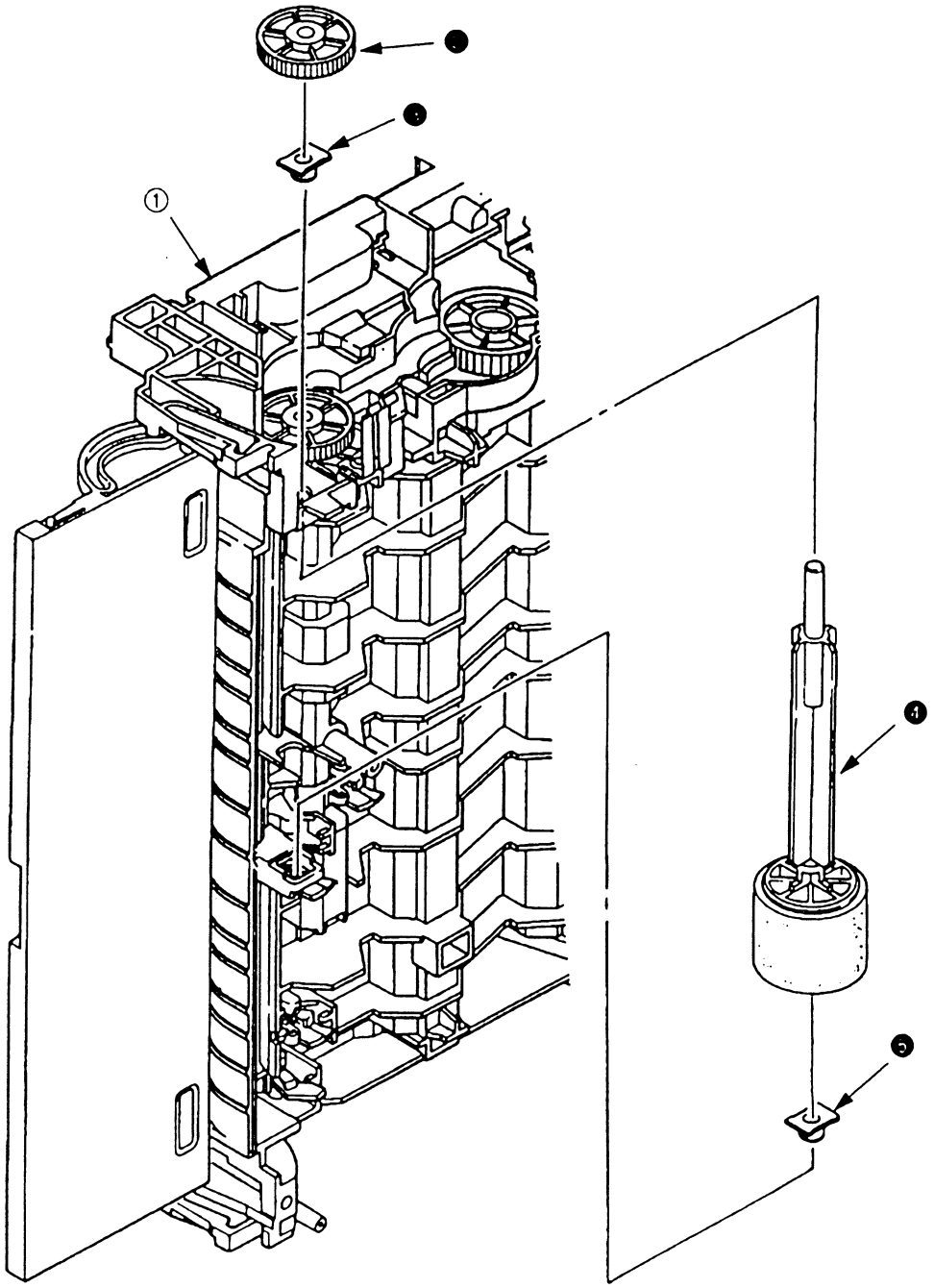

3.3.10 Stacker Cover Assy

(1) Remove the upper cover (see 3.3.1).

(2) Remove the motor assy (see 3.3.8).

(3) Remove the reset lever R ❶.

(4) Detach the reset spring ❷ from the lower base unit ③, turn the reset level L ❸ in the direction of the arrow Ⓐ until it stops, and remove it in the direction of the arrow Ⓑ.

(5) Release two pins of the lower base unit ③, then remove the stacker cover assy ❺.

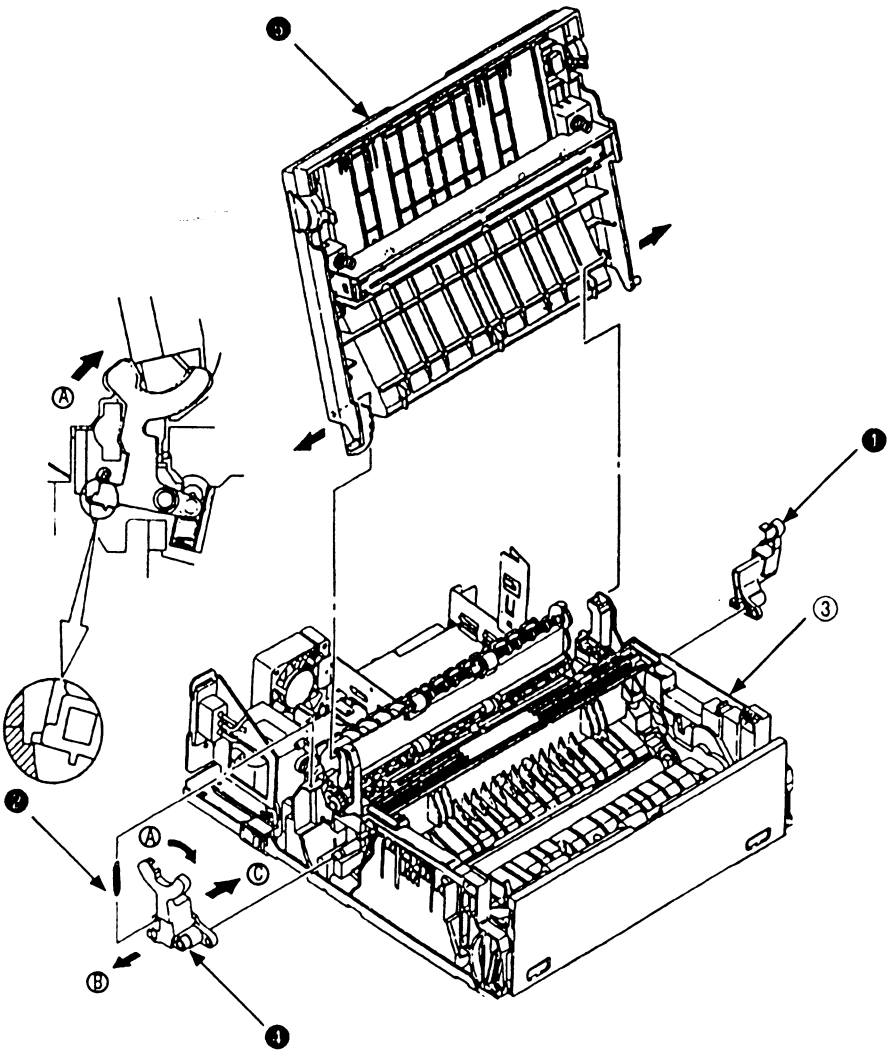

3.3.11 Registration Roller

(1) Remove the upper cover (see 3.3.1).

(2) Remove the lower base unit (see 3.3.7).

(3) Remove the motor assy (see 3.3.8).

(4) With the lower base unit standing on its side (view A), remove the one-way clutch gear ❶.

(5) Press the registration roller ❷ to the right side (in the direction of the arrow as shown) and lift up the left side. Remove the registration roller ❷ and the bearing (registration) ❸.

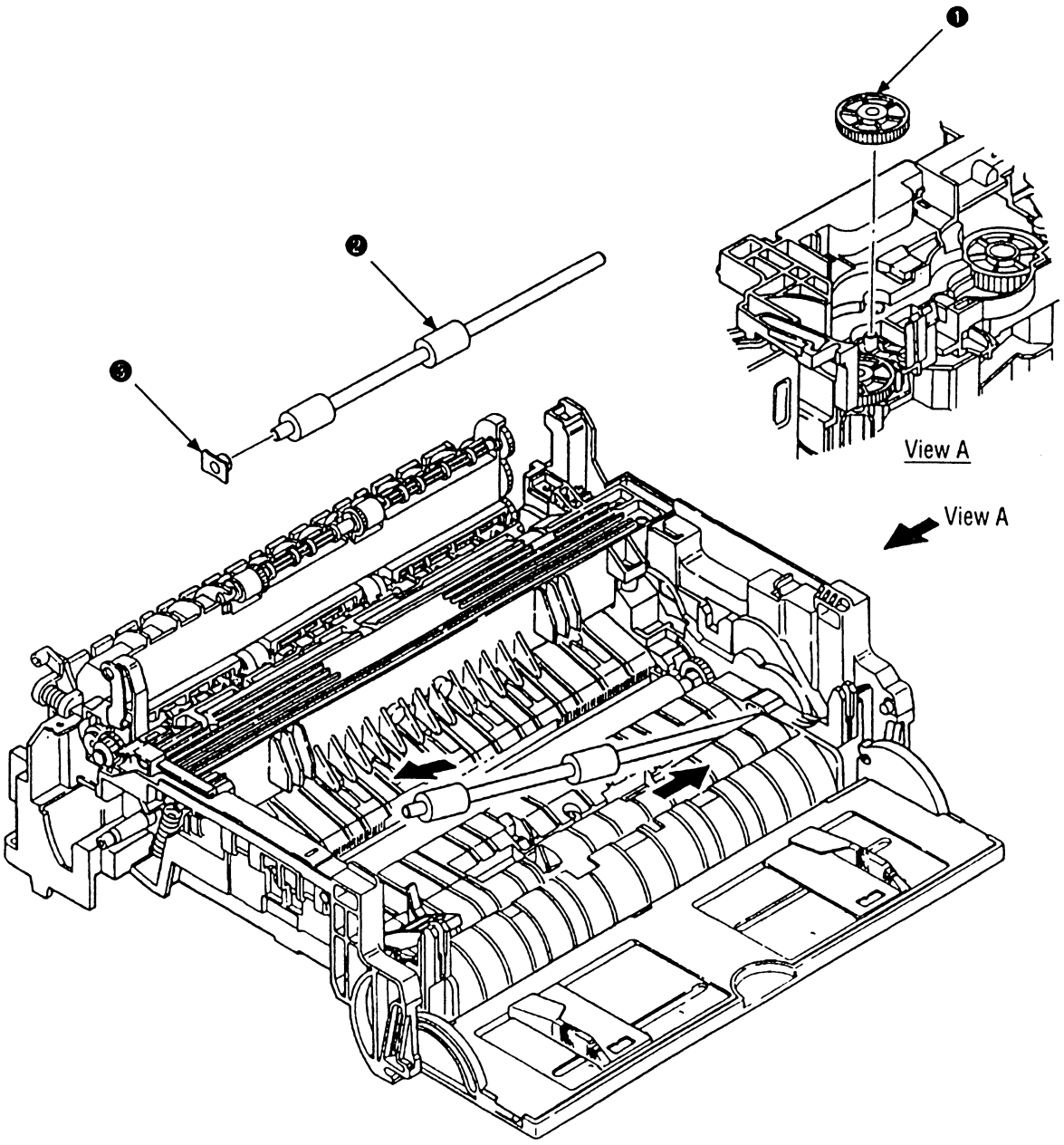

3.3.12 Transfer Roller

(1) With the power switch turned off, unplug the AC power cord from the outlet.

(2) Open the stacker cover.

(3) Release TR gear ❶ by unlocking the latch ❶ of the main unit (never apply an excessive force when unlocking the latch).

(4) Lift the right side of the transfer roller ❷, and shift it to the right side, then pull it out from the main unit (at this time, the bearings ❸ of the left and right sides of the transfer roller ❷ will release themselves).

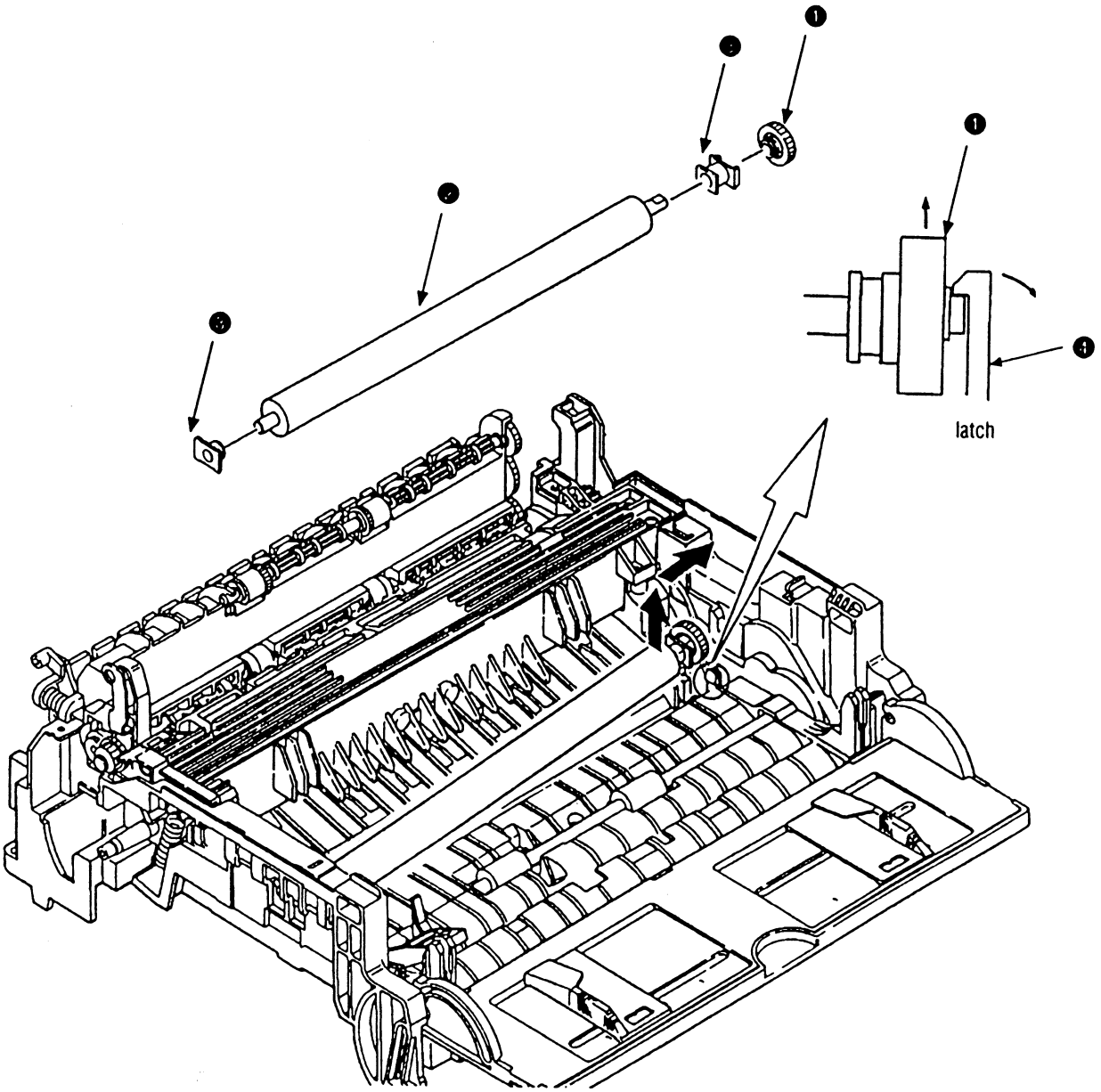

3.3.13 Fusing Unit Assy

(1) Remove the upper cover (see 3.3.1).

(2) Remove the lower base unit (see 3.3.7).

(3) Remove the stacker cover assy (see 3.3.10).

(4) Remove four screws ① and remove the fusing unit ●.

Caution: Fusing unit assy may be hot. Use care when handling.

Note: When installing or removing the fusing unit assy, tighten or loosen the screws while holding the fusing unit down with your hand.

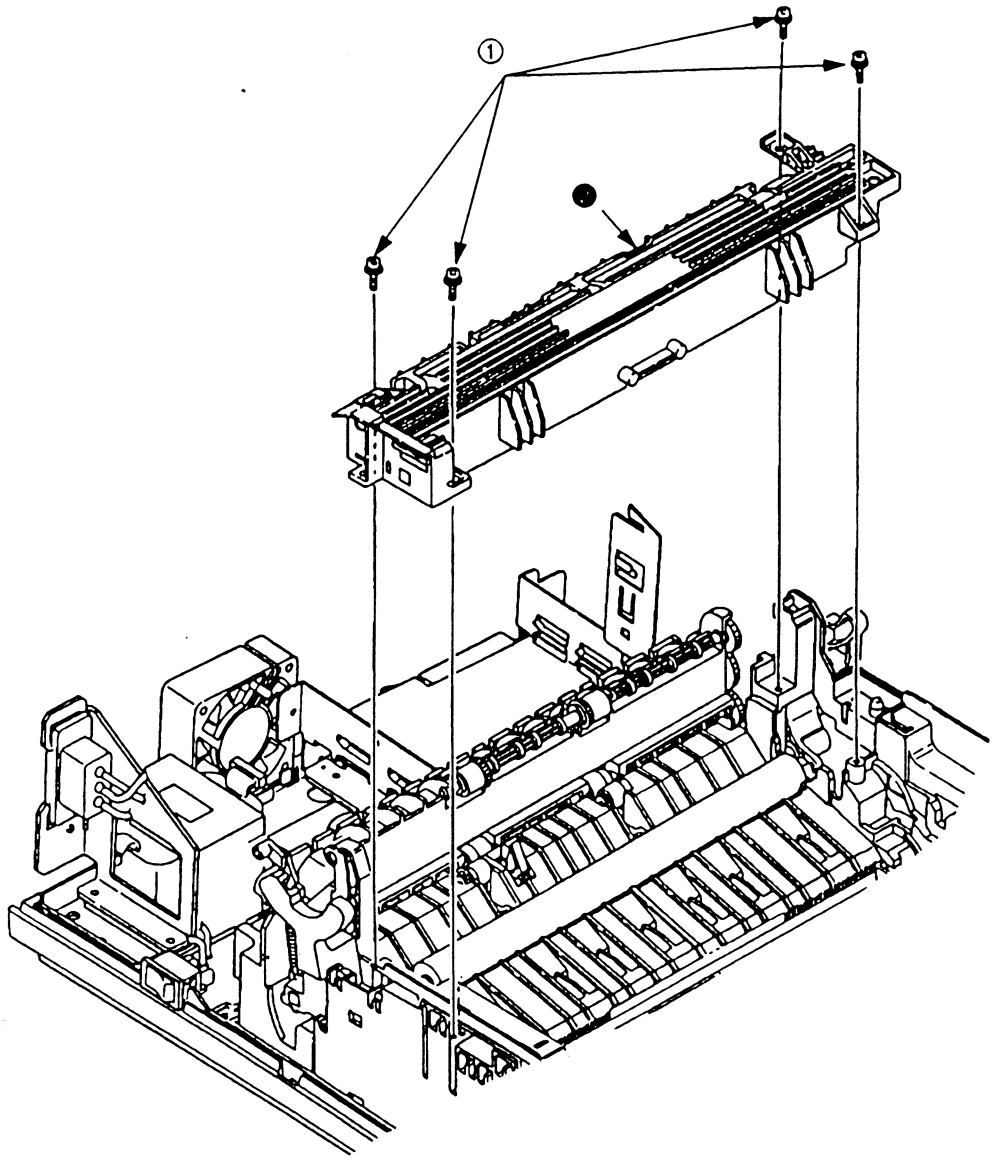

3.3.14 Back-up Roller

(1) Remove the fusing unit assy (see 3.3.13).

(2) Lift the left side of the back-up roller ❶, and pull it out to the left side (at this time, two bushings ❷, the bias springs ❸ and washers ❹ and ❺ will release themselves).

Note: Do not bend or lose springs.

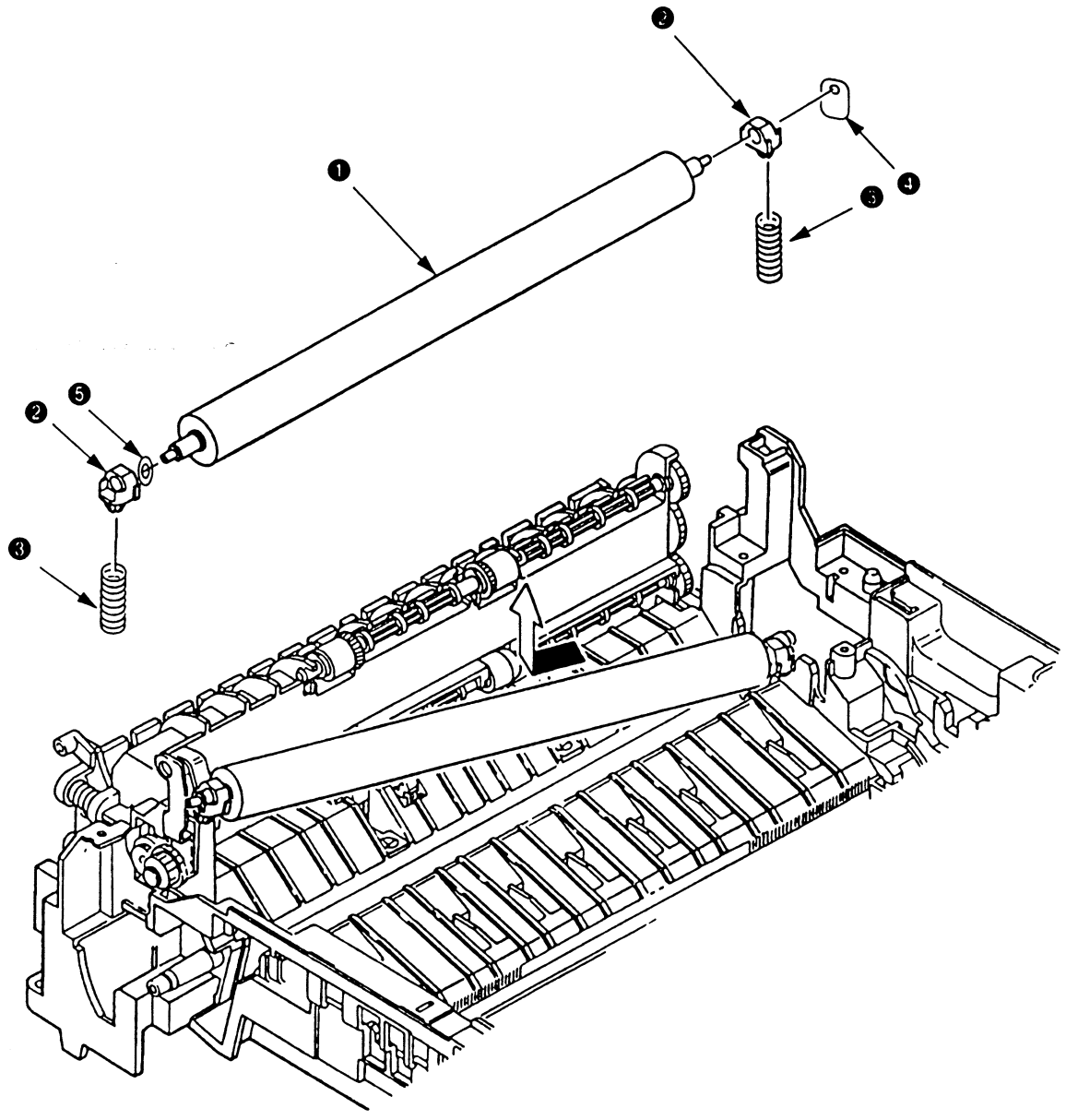

3.3.15 Sensor Plate (Inlet)

(1) Remove the upper cover (see 3.3.1).

(2) Remove the lower base unit (see 3.3.7).

(3) Press the clamps of three sensor plates (inlet) ❶, and remove the sensor plates by pressing them upward from the bottom side.

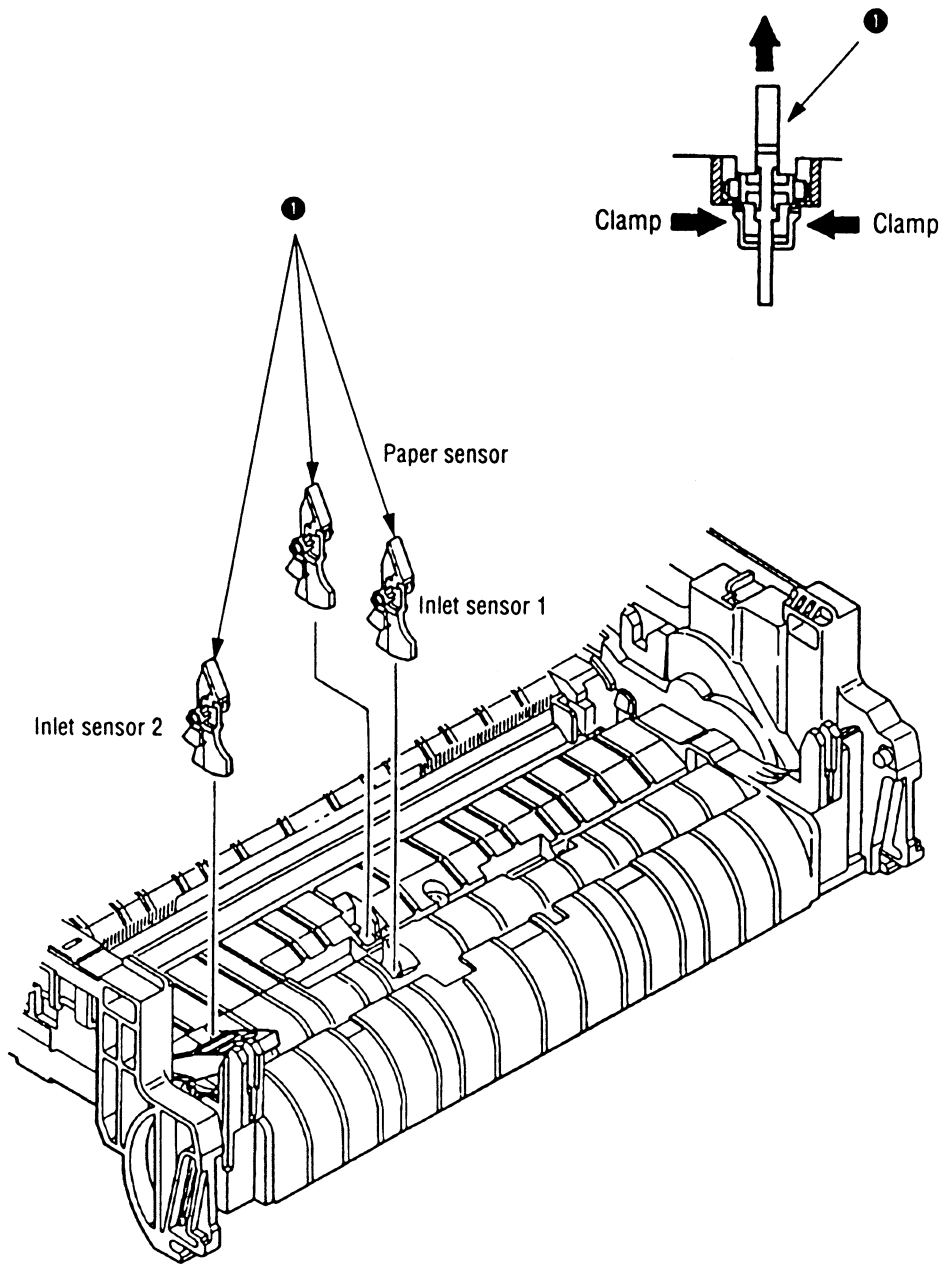

3.3.16 Toner Sensor (Adhesion)

(1) Remove the upper cover (see 3.3.1).

(2) Remove the lower base unit (see 3.3.7).

(3) Press the clamp of the toner sensor ❶, and remove the sensor by pushing it up from the bottom.

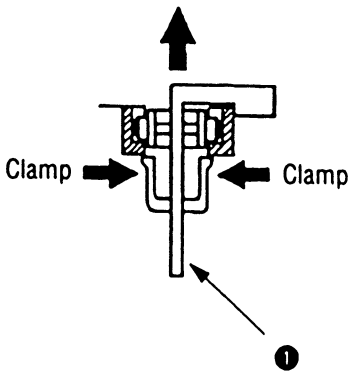

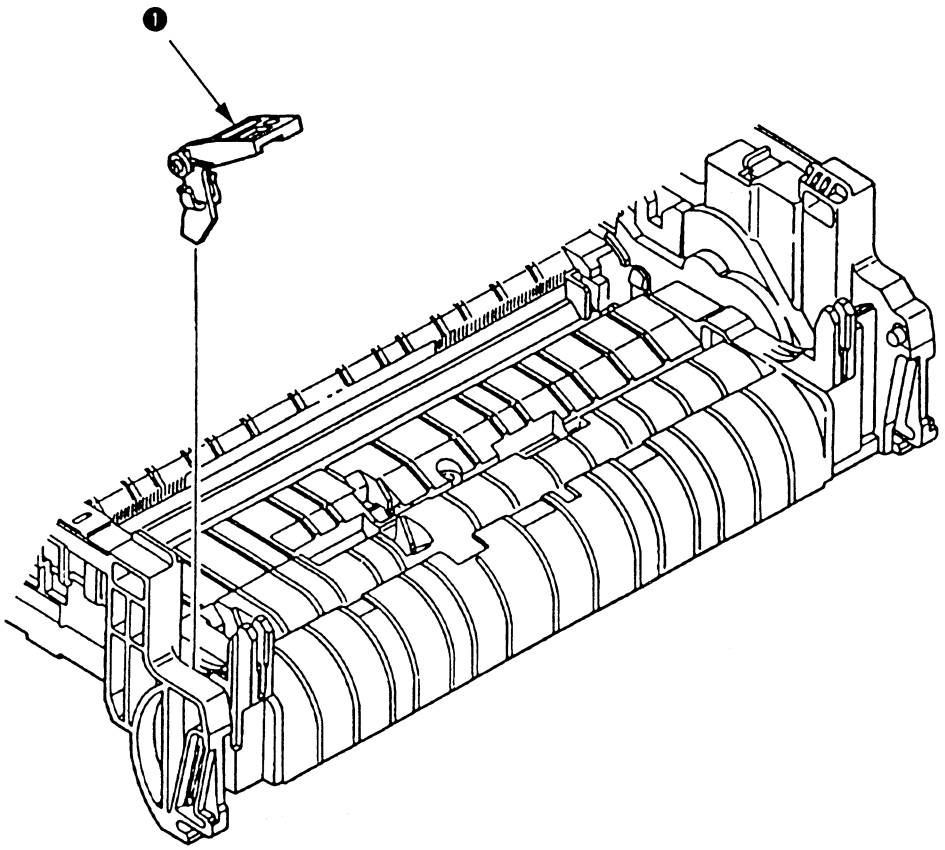

3.3.17 Sensor Plate (Outlet)

(1) Remove the upper cover (see 3.3.1).

(2) Remove the eject roller assy (see 3.3.4).

(3) Remove the lower base unit (see 3.3.7).

(4) Remove the fusing unit assy (see 3.3.13).

(5) Press the clamp of the sensor plates (outlet) ❶, and remove the sensor plate by pushing it up from the bottom.

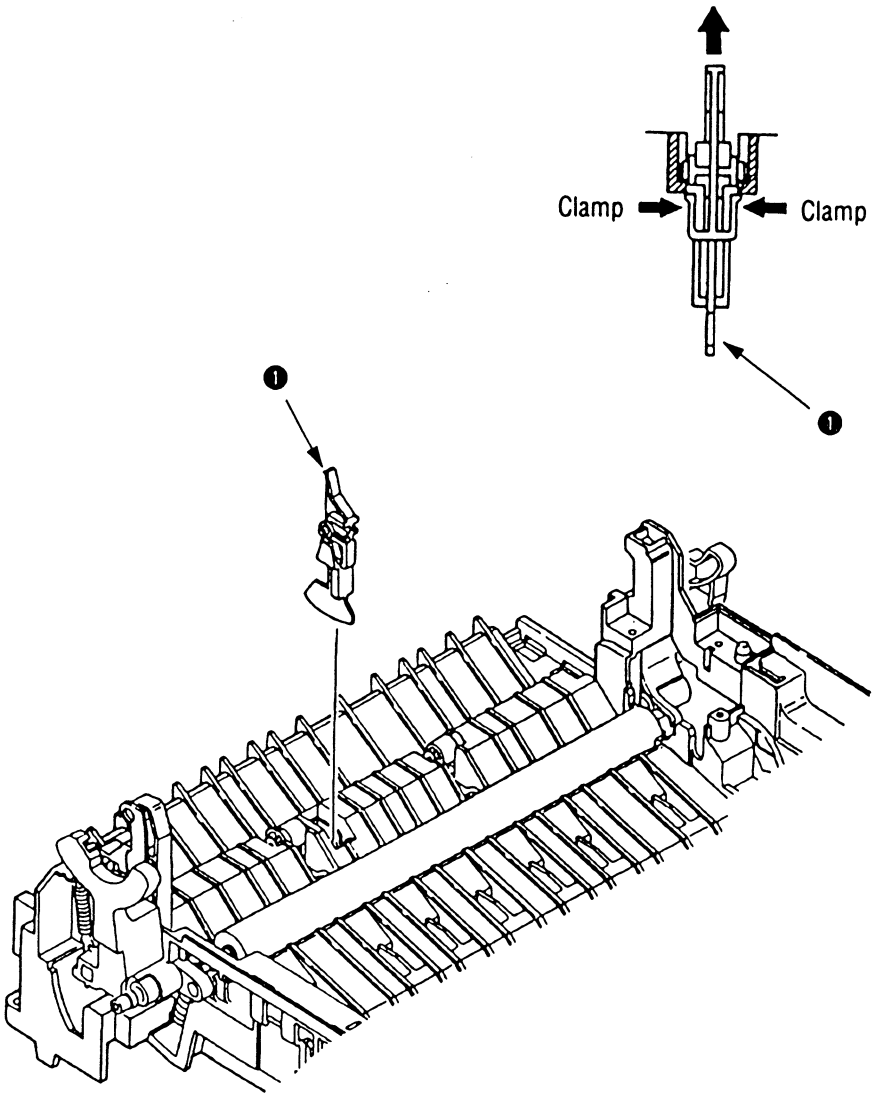

3.3.19 Sensor Plate (Paper Supply)

(1) Remove the upper cover (see 3.3.1).

(2) Remove the lower base unit (see 3.3.7).

(3) Press the clamp of the sensor plate (paper supply) ❶, and remove it from the base plate ②.

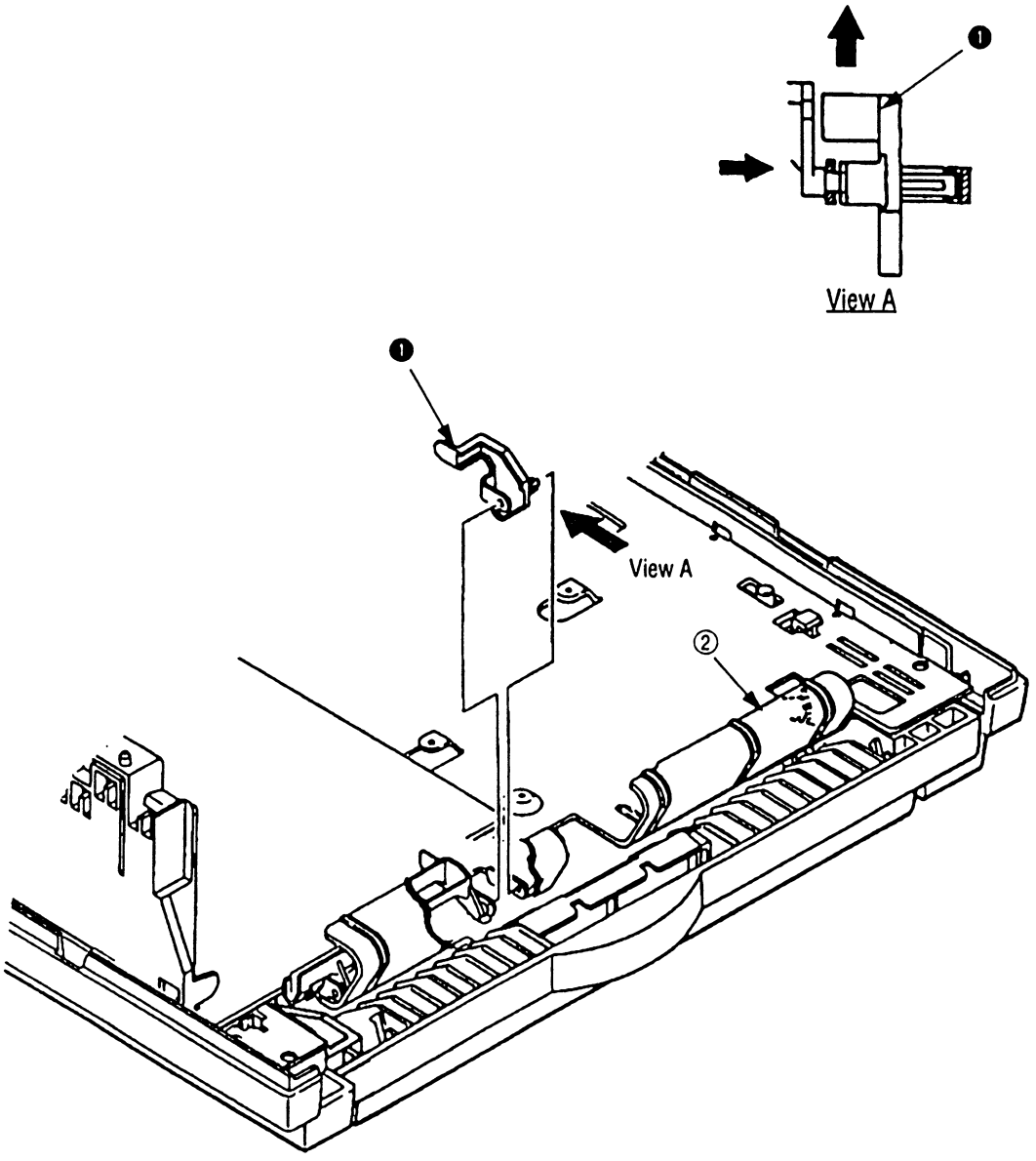

3.3.20 Main Control PCB

Note: When replacing the Main Control PCB, the contents of the EEPROM shall be copied to the new PCB. This process requires a maintenance utility. (See 4.3.1 ④ and 4.3.2 ④ for details.)

- The Main Control PCB is different for each model.
  OL600ex: LQ5C-PCB
  OL610ex: LQ6C-PCB

(1) Remove the upper cover (see 3.3.1).

(2) Remove the lower base unit (see 3.3.8).

(3) Remove two screws ①.

(4) Move the Main Control PCB ❷ in the direction of arrow Ⓐ to disconnect it from the power supply board ❶.

(5) Remove the Main Control PCB ❷ together with the PCB guide plate ④ (disconnect the fan motor connector ❺ from the Main Control PCB).

(6) Remove three screws ⑥ and remove the PCB guide plate ④ from the Main Control PCB ❷. Do not bend or lose ground plate ⑨.

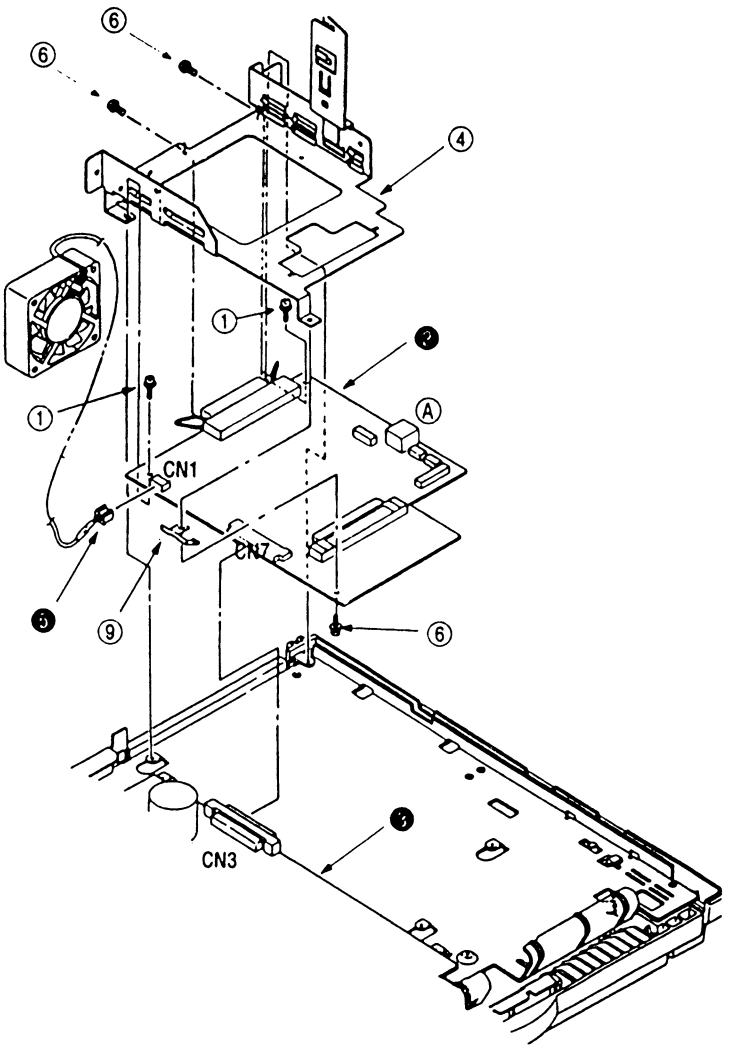

3.3.21 Power Supply Board and Contact Assy

(1) Remove the upper cover (see 3.3.1).

(2) Remove the lower base unit (see 3.3.7).

(3) Remove the Main Control PCB (see 3.3.20).

(4) Remove the AC inlet ① from the inlet holder ❶, and remove the connector ③ of the transformer.

(5) Remove the screws ④, and remove the ground cable ⑤.

(6) Remove three screws ⑥, and remove the power supply board ❼ and contact assy ❽ at the same time.

(7) Unlock two claws ⑨, and remove the contact assy ❽ from the power supply board ❼.

Note: When mounting the lower base unit, be careful about the paper end sensor. Do not apply excessive force to the power switch during reassembly.

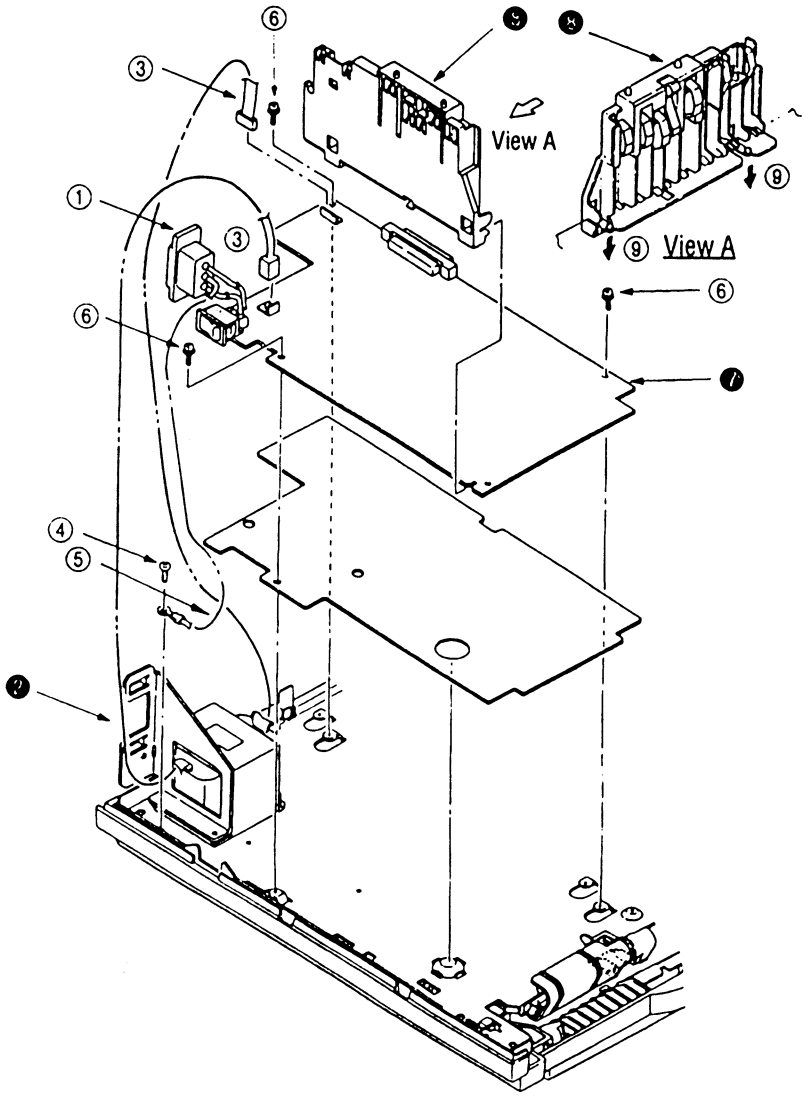

3.3.18 Manual Feed Guide Assy

(1) Remove the upper cover (see 3.3.1).

(2) Open the manual feed guide assy ❶, and release the engagement on both sides with the main unit by carefully bending the manual feed guide assy ❶.

Note: At the time of mounting, verify the proper the engagements as shown in the diagram.

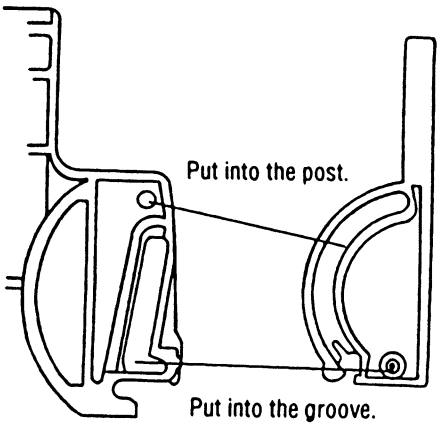

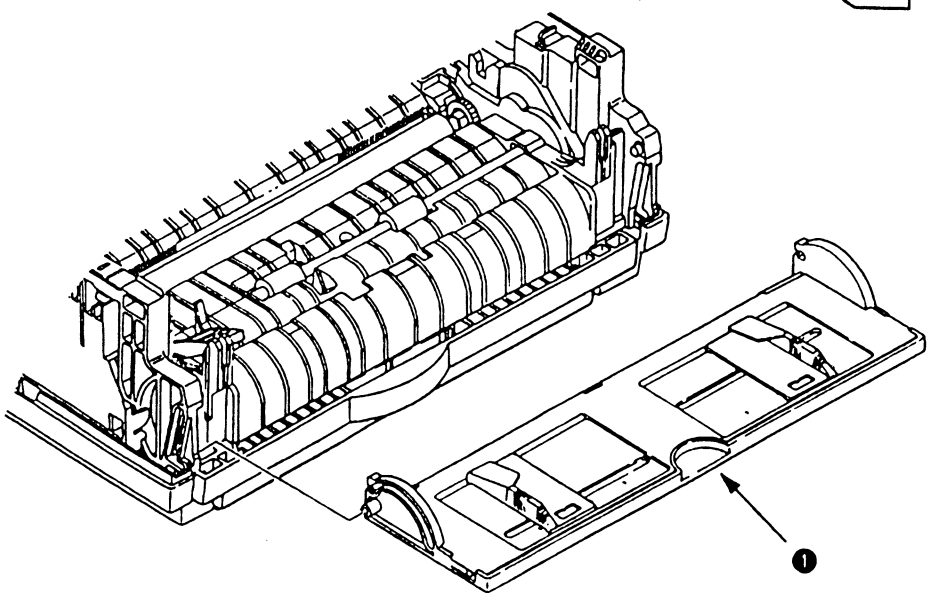

3.3.22 Transformer

(1) Remove the upper cover (see 3.3.1).

(2) Remove the lower base unit (see 3.3.7).

(3) Remove the connectors (CN1 and CN2).

(4) Remove the inlet ③ from the inlet holder ❷.

(5) Remove two screws ①, and remove the inlet holder ❷ and the transformer ❶.

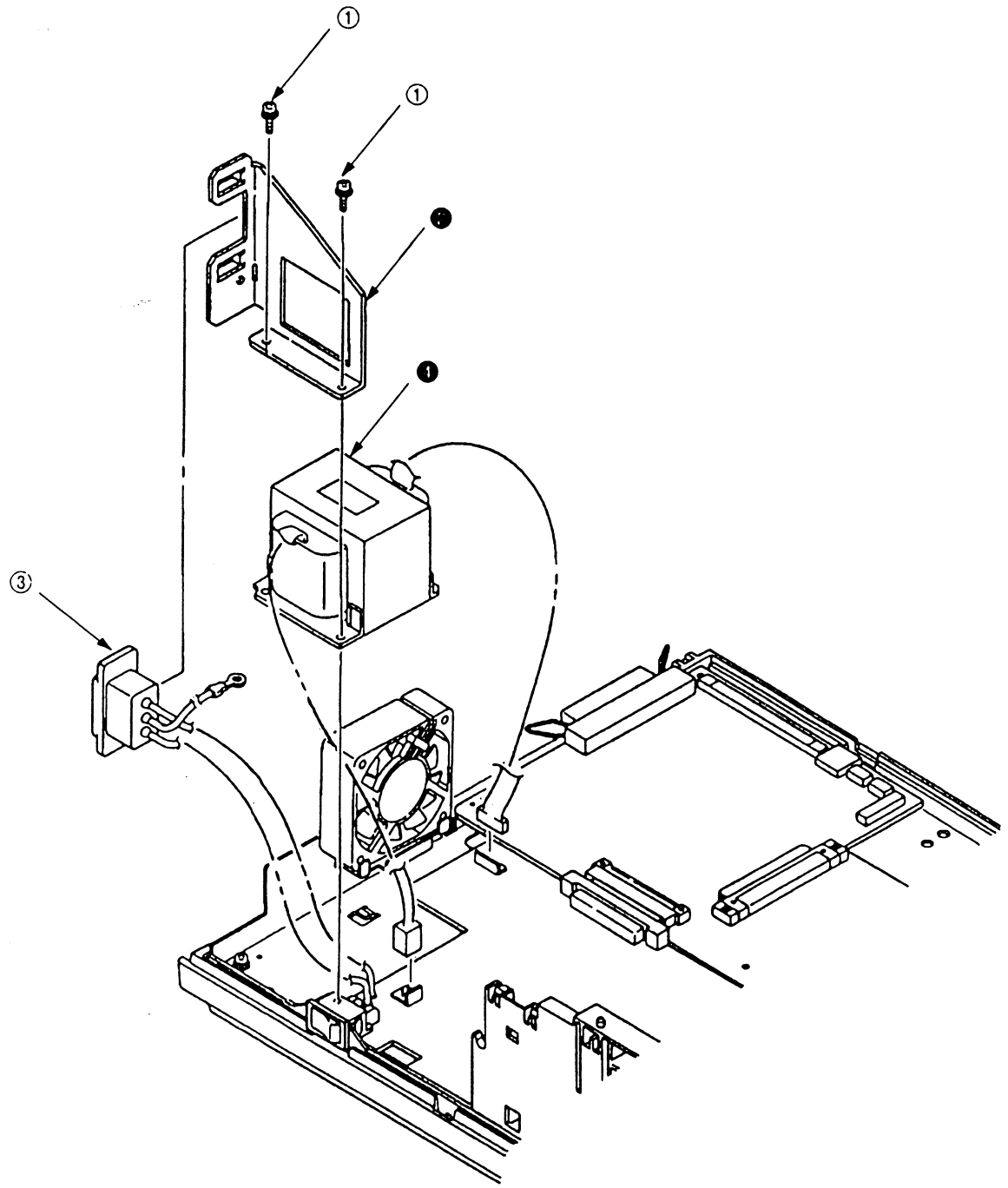

3.3.23 Cassette Guide L

(1) Remove the paper cassette.

(2) Remove the upper cover (see 3.3.1).

(3) Remove the lower base unit (see 3.3.7).

(4) Remove the Main Control PCB (see 3.3.20).

(5) Remove the power supply board (see 3.3.21).

(6) Remove the screw ①, and remove the cassette guide L ❷ by shifting it in the direction of the arrow.

(7) Detach the eject spring ❸, and remove the support spring ❶ from the cassette guide L ❷.

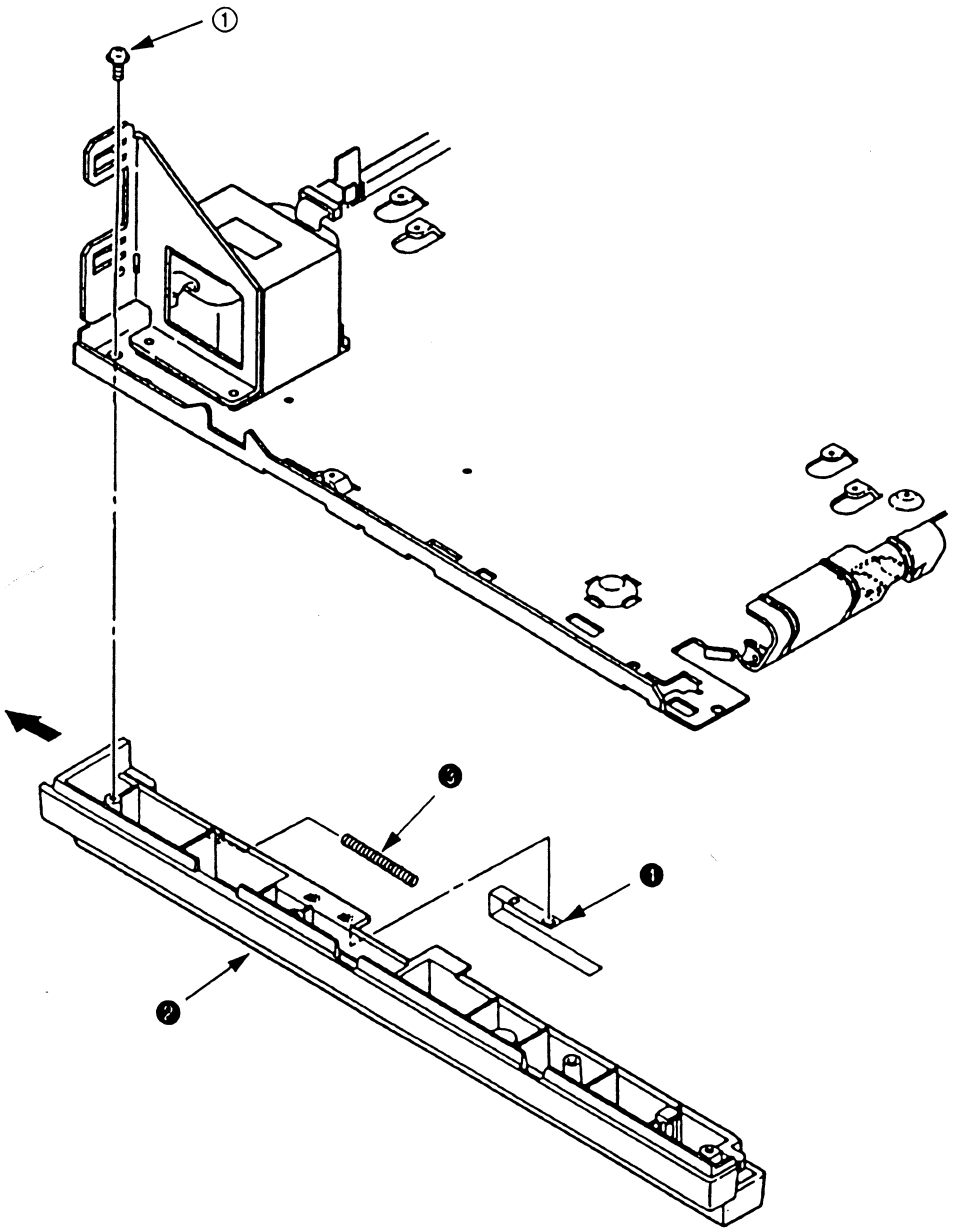

3.3.24 Cassette Guide R

(1) Remove the paper cassette.

(2) Remove the upper cover (see 3.3.1).

(3) Remove the lower base unit (see 3.3.7).

(4) Remove the Main Control PCB (see 3.3.20).

(5) Remove the screw ①, and remove the cassette guide R ❷ by shifting it in the direction of the arrow.

(6) Pull the eject spring ❸ out of the cassette guide R ❷, then remove the support spring ❶.

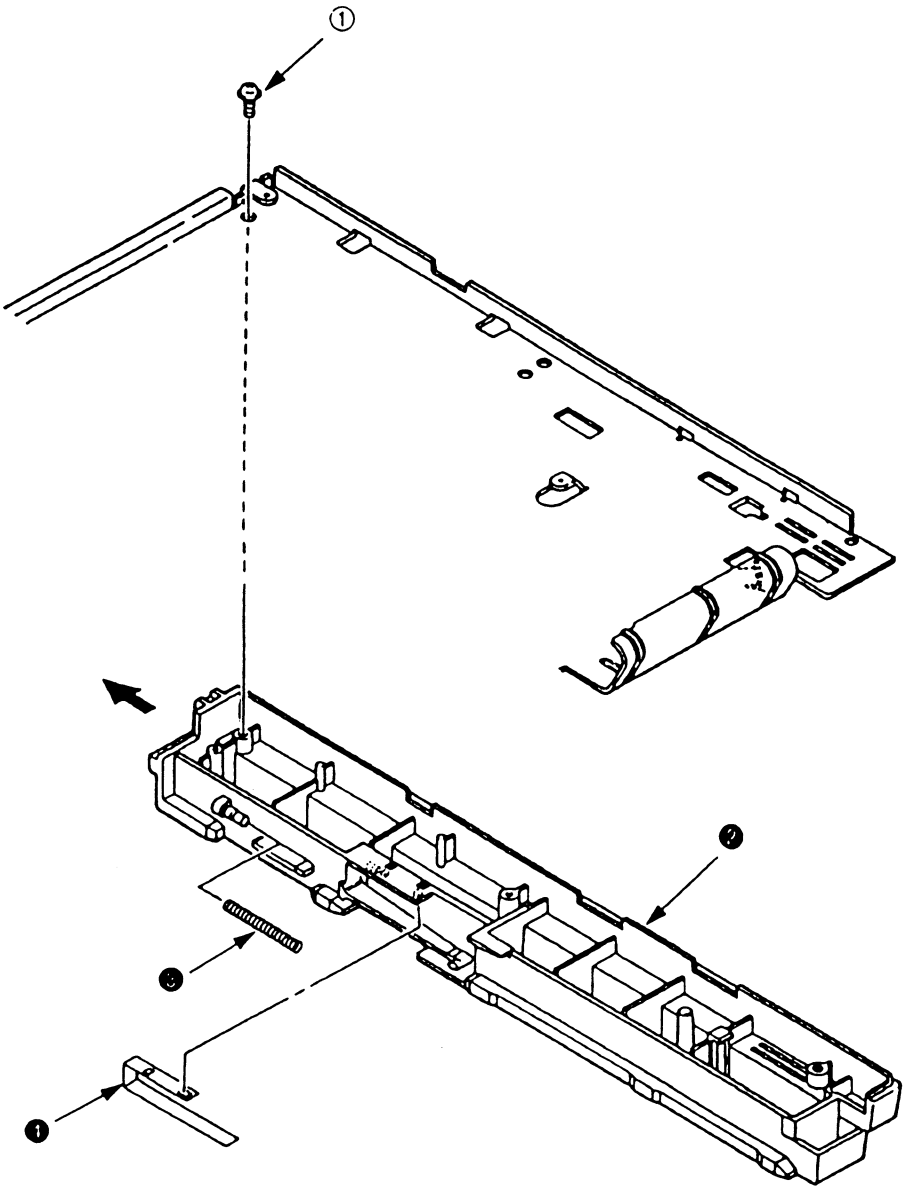

4. ADJUSTMENT

4. ADJUSTMENT

4.1 Adjustment (OL600ex)

This chapter describes the adjustment necessary when replacing a part. The adjustment is made by changing the parameter value set in EEPROM on the Main Control PCB by means of a printer driver or by a maintenance utility program.

The maintenance utility is designed to be used only by field engineer and it should not be released to the end-users.

4.1.1 Maintenance Functions

① Printer driver

Printer driver has following functions

- Drum counter reset
- Printer menu default
- Charge roller cleaning

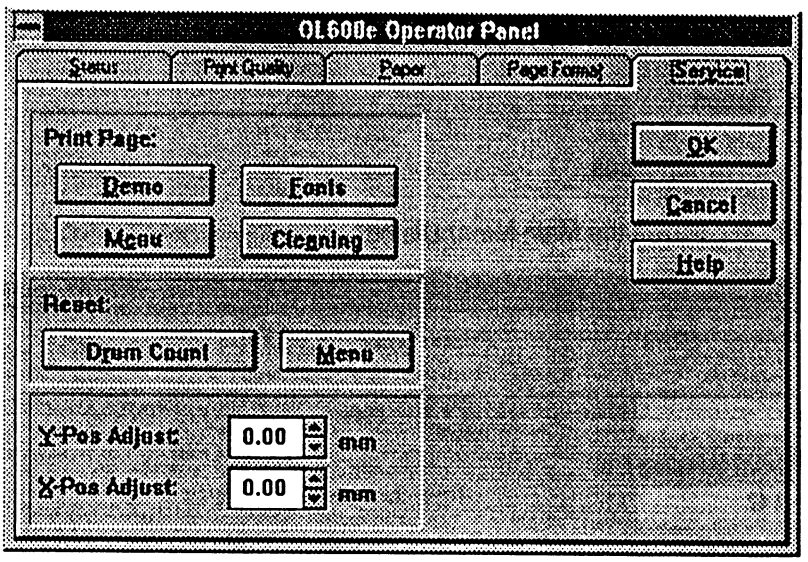

Figure 4-1

(a) Drum counter reset

For initializing engine counter when user has replaced an Image drum unit.
The counter is reset by clicking "Drum Count Reset" button.

(b) Printer menu default

For resetting the printer menu to the default value.
The menu is automatically reset by clicking "Default" button.

(c) Charge roller cleaning

For cleaning a charge roller of the Image drum unit.
It is used when print quality is deteriorated.
For details, refer to the user's manual.

② Maintenance utility

Maintenance utility has following functions.

(1) Engine Menu

For setting the engine menu.

(2) Engine Counter Reset

For resetting the engine counter.

(3) Status Monitor

For real time display of the printer status.

(4) Test print

For local print or test print.

(5) Reload

For reading out the printer setting information.

(6) Option

Other functions.

Fig. 4-2 shows the Main Menu Dialog.

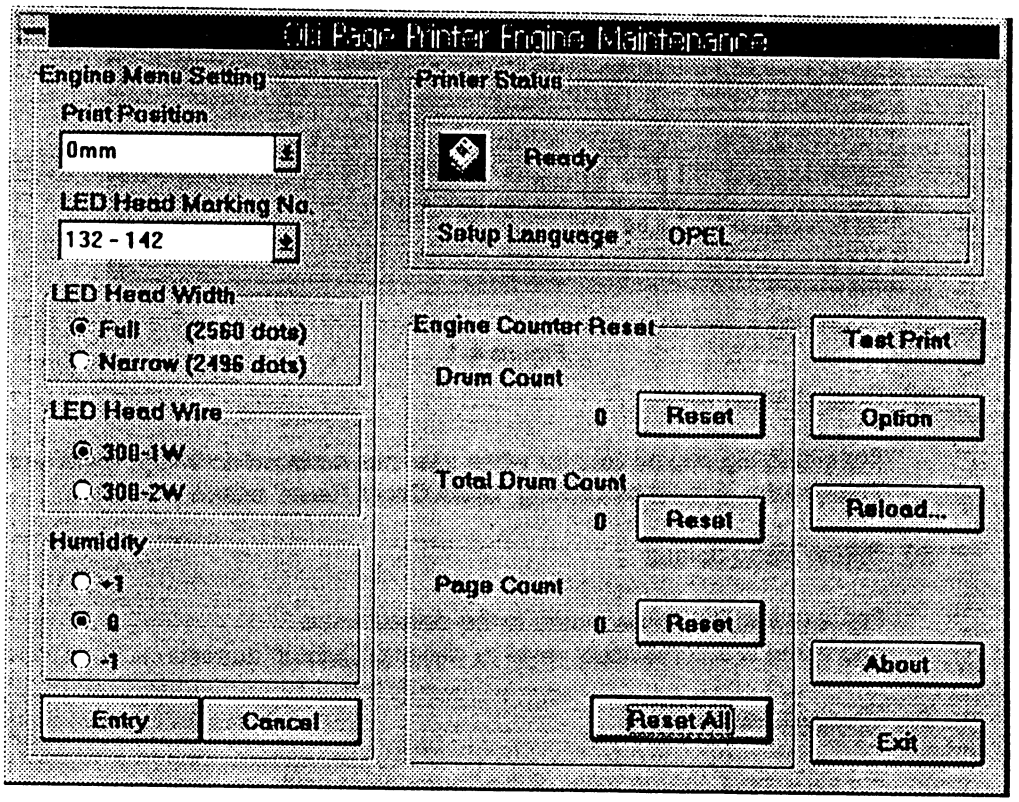

Figure 4-2

②-1 Engine Menu

The following functions can be set in the Engine Menu.

(1) Print Position

For adjusting print start position.

(2) LED Head Marking No.

For adjusting LED Head marking duration.

(3) LED Head Width

For stipulating number of LED dots.

(4) LED Head Wire

For stipulating whether the data wire of the LED head is of 1 line type (non compensation) type or 2 lines type (compensation) type.

(5) Setting

For adjusting transfer current value.

(6) Enter

For entering the value newly set by the menu.

(7) Cancel

For canceling the value not yet entered.

②-2 Engine Counter

The following functions can be set in the Engine Counter.
Each item is reset by clicking of the "Reset" button.

(1) Drum Count

The number of drum revolution of the EP drum unit, counted at the engine block.

(2) Total Drum Count

The total number of drum revolution of the printer, counted at the engine block.

(3) Page Count

The total number of printed pages counted at the engine block.

(4) Reset All

Resetting all counters by clicking of the button.

②-3 Status Monitor

The Status Monitor checks printer status for real time display.

②-4 Test Print Button

The Test Print Button shows the Test Print Dialog to execute local print or test file print.

(1) Print Menu

It performs the menu print.

(2) Print Demo

It performs a demo print.

(3) Print Fonts

It prints font samples.

(4) Cleaning

It performs special print to clean the charge roller.

(5) Print File

It performs a test file print.

Printer emulation is stipulated by a file suffix.

xxx.HBP (Hiper-W emulation)
xxx.BIN (PCL emulation)
xxx.PRN (Ditto)
xxx.aaa (Ditto: aaa may be any strings other than the above.)

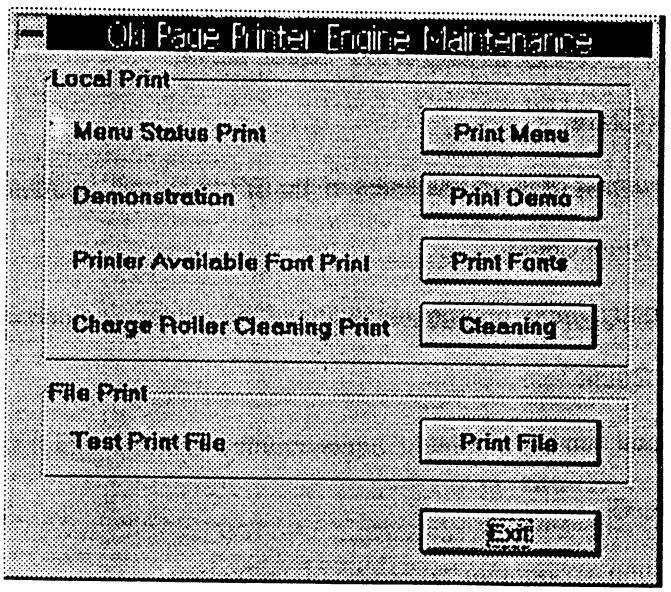

Figure 4-3

②-5 Option Menu Button

It performs operation selected in the Option Button Menu.
Available operations are as follows.

(1) Reset Engine

It resets all the Engine Menu contents to the factory default setting.

(2) EEPROM Upload

It upload the contents of the Engine Menu Setting and Engine Counter data into the memory on the PC.

(3) EEPROM Download

It download the Engine Menu Setting and Engine Counter data from the memory on the PC and copy it to the EEPROM on the printer.

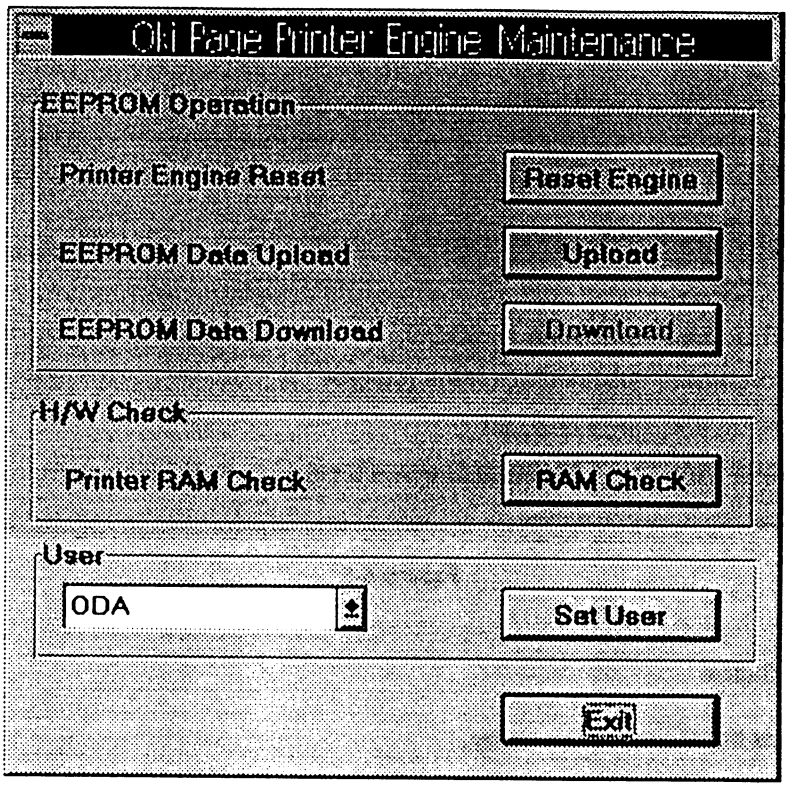

Figure 4-4

②-6 Reload Button

The same setting as in the starting up of an application software can be made. It reads out the settings of the printer being connected.

It is used to change the printer while running the same application program on the PC.

②-7 About Button

It displays information on the Maintenance Utility and the printer firmware.

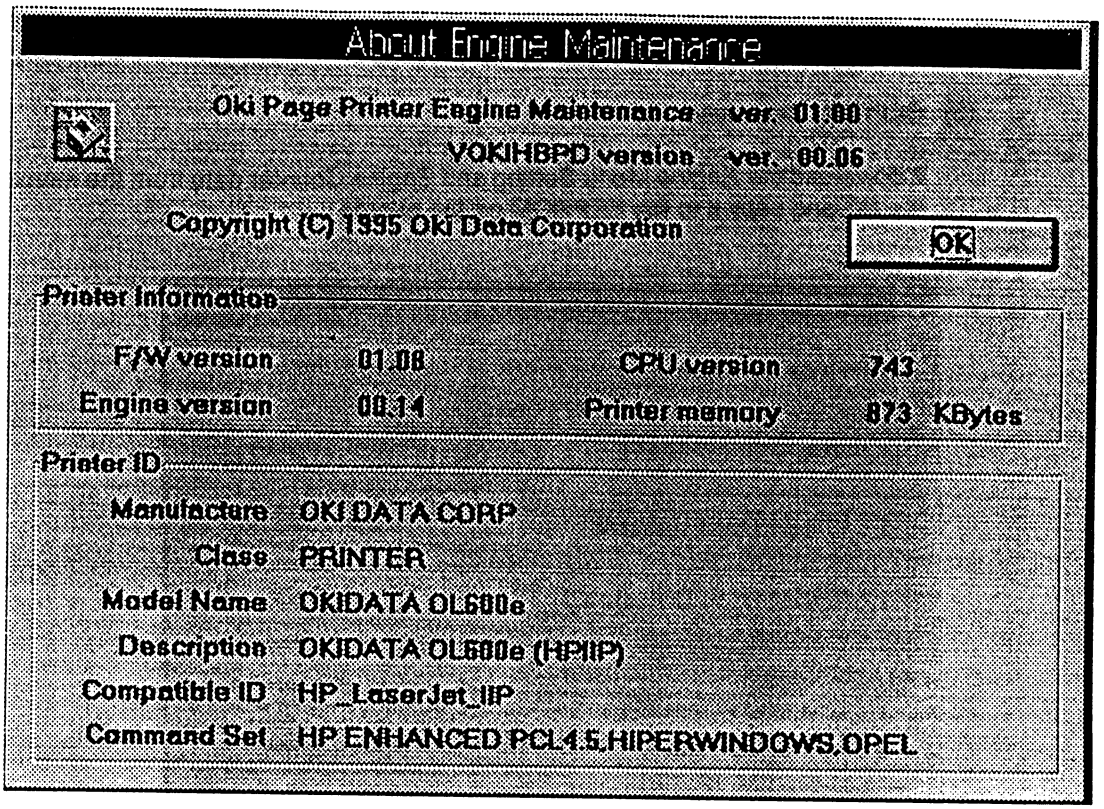

Figure 4-5

②-8 Exit Button

It ends the Maintenance Utility.

②-9 Setup Dialog

The Setup Dialog is displayed when "Setup" is selected from the system menu items on the Main Menu Dialog.

In the Setup Dialog, selection of printer languages and printer port is available.

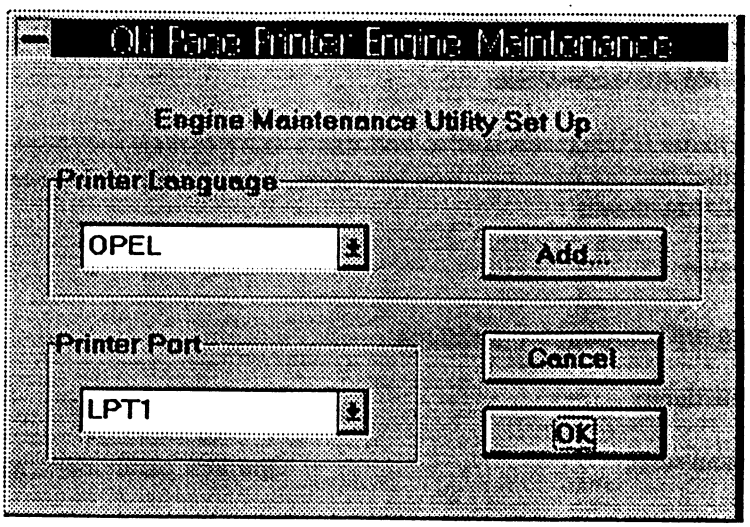

Figure 4-6

(1) Printer Language

For selecting a printer language.

(2) Add

For adding a printer language (not yet supported).

(3) Printer Port

For selecting a printer port.

(4) Cancel

For canceling the setting and returning to the Main Menu Dialog.

(5) OK

For initializing the settings to reflect all the settings in the menu.

4.2 Adjustment (OL610ex)

This chapter describes the adjustment necessary when replacing a part. The adjustment is made by changing the parameter value set in EEPROM on the Main Control PCB. The parameter can be set by the key operation from the operator panel. This printer has three kinds of maintenance modes, and it is necessary to select one of the modes when replacing a part.

4.2.1 Maintenance Modes and Functions

① User Maintenance Mode

This mode is being released to end-users, but it is rarely accessed.
To enter into the user maintenance mode, turn the POWER switch on while holding the MENU key down.

Function

There are following five functions:

- Hex dump
- Drum counter reset
- Menu reset
- Operator panel menu disable
- X-adjust / Y-adjust (OL610ex)

Detailed descriptions of these functions are provided in Appendix C, DIAGNOSTICS TEST.

② System Maintenance Mode

Note: This mode is used only by service persons and it should not be released to the end-users.

To enter into the system maintenance mode, turn the POWER switch on while holding the RECOVER key down.

Function

There are following five functions:

- Page count display
- Page count printing enable/disable
- EEPROM reset
- Rolling ASCII continuous printing

Detailed descriptions of these functions are provided in Appendix C, DIAGNOSTICS TEST.

③ Engine Maintenance Mode

Note: This mode is used only by service persons, and it should not be released to the end users.

To enter into the engine maintenance mode, turn the POWER switch on while holding the FORM FEED and ENTER keys down.

Function

There are following six functions :

- Head drive time setting
- Printing start position setting
- Drum count display
- LED head width setting
- Transfer current setting
- Drum count total display
- Engine reset
- Factory adjustment
- LED head type setting

Note: "Printing start position setting" is for shipping. Do not change its default value.

Detailed descriptions of these functions are provided in Appendix C, DIAGNOSTICS TEST.

4.3 Adjustment When Replacing a Part

4.3.1 Adjustment at the Time of Part Replacement (OL600ex)

The following table lists parts that require adjustment after replacement.

Parts	Required Adjustment
LED head	LED head drive time LED head width Type of the LED head
Image drum unit	Drum counter reset (Refer to the user's manual for details.)
Control P.C.B.	Upload/Download EEPROM data

① LED head drive time setting

Caution: Do not change the LED head drive time when the luminous energy indicated on the new LED head is the same as that of the old LED head.

The LED head drive time is set in the LED Head Marking No. on the Engine Menu of the Maintenance Utility. Input the value printed on the serial No. label on the LED head. The last 3 digits indicates the luminous energy of the LED head. (See Fig. 4-2.)

- LED head luminous energy

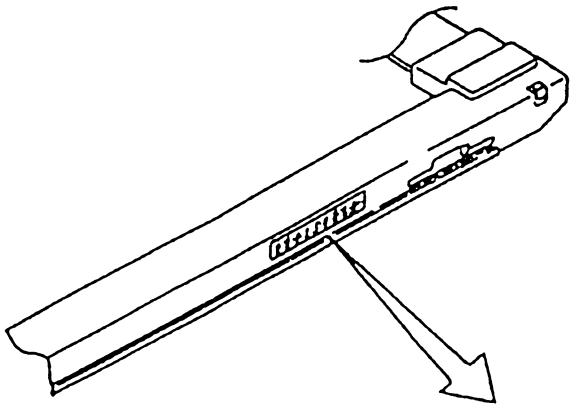

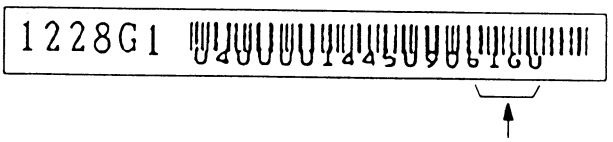

The last 3 digits indicates the luminous energy of the LED head.

Luminous energy indications
070
↕
314

② LED head width setting

There are two types of LED head width. The type of the LED head is distinguished by the serial No. label on the head. Set the LED Head Width on the Engine Menu accordingly. (See Fig. 4-2).

- How to distinguish LED head width

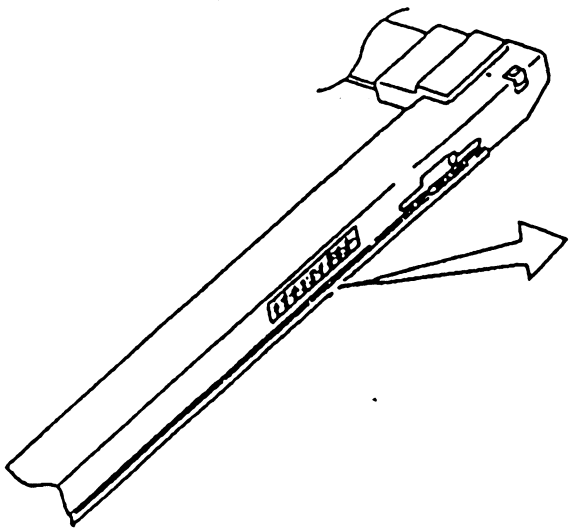

Narrow Type (2496 dots)

Full Type (2560 dots)

③ LED head type setting

There are two types of LED data wire: 1 wire type and 2 wires type. For this printer, 1 wire type is used. Select "Data wire 1 wire type" LED Head Wire on the Engine Menu. (See Fig. 4-2).

- LED head data wire type

  300-1W: Data wire 1 wire type
  300-2W: Data wire 2 wires type

④ Uploading/Downloading EEPROM data

When the controller printed circuit board is replaced, the contents of the old EEPROM shall be copied to the new EEPROM on the new board to preserve customer settings. For the purpose, use the EEPROM operation on the Option of the Maintenance Utility. (See Fig. 4-4.) To copy follow the steps below.

(1) Be sure to confirm that the printer and the PC are connected with a centronics I/F cable. Then execute the Maintenance Utility. (Note: Printer driver shall be installed.)

(2) Select the Option on the Maintenance Utility.

(3) Click the "UPLOAD EEPROM" button on the "EEPROM Operations".

(4) The contents of the EEPROM data is displayed on the "DIALOG" of the Maintenance Utility. The contents of the old EEPROM is now copied into the memory of the PC.

(5) Replace the controller P.C.B. with a new one while it displays the above "DIALOG".

(6) After the replacement, click "Download EEPROM" on the "EEPROM Operations". EEPROM upload has been completed.

In case of troubles such as centronics I/F failure, etc. EEPROM data may not be uploaded properly. In such case, it is necessary to adjust the following setitngs manually after the replacement using the Maintenance Utility.

- LED driver time (See 4.3.1.)
- LED head width setting (See 4.3.1.)
- LED head data wire type (See 4.3.1.)
- Factory setting (ODA/OEL/INT-A/INT-L)

4.3.2 Adjustment When Replacing a Part (OL610ex)

Adjustment is necessary when replacing any one of the following parts.

Parts	Required Adjustment
LED head	LED head drive time LED head width LED type
Image drum unit	Drum counter reset (Refer to the User's Manual.)
Main Control Board	EEPROM data Upload/Download (See 4.3.1 ④.)

① Setting of LED Head Drive Time

Note: When the luminous intensity marking of the replacement LED head (new part) is same as that of the removed LED head (old part), do not set the LED head drive time.

- Luminous Intensity Marking Label

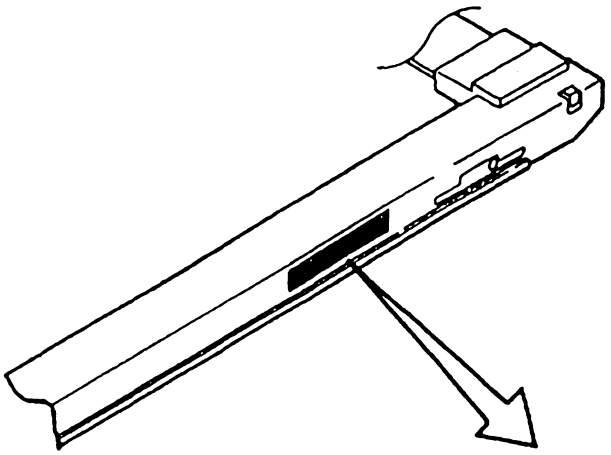

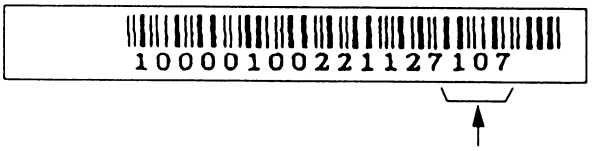

Last 3 digits represent the
LED head marking number.

Luminous intensity marking
100
I
313

- Setting of LED Head Drive Time

  Drive time of the LED head is set by setting the parameter of drive time of EEPROM according to the luminous intensity marking on the LED head.

  a. Corresponding table of luminous intensity marking and drive time parameter

Luminous intensity marking on LED head	Drive time parameter	Luminous intensity marking on LED head	Drive time parameter
056 ~ 062	34	132 ~ 142	23
063 ~ 065	33	143 ~ 154	22
066 ~ 069	32	155 ~ 167	21
070 ~ 076	31	168 ~ 180	20
077 ~ 082	30	181 ~ 195	19
083 ~ 088	29	196 ~ 211	18
089 ~ 096	28	212 ~ 228	17
097 ~ 104	27	229 ~ 247	16
105 ~ 112	26	248 ~ 268	15
113 ~ 121	25	169 ~ 290	14
122 ~ 131	24	291 ~ 313	13

b. Setting

Example: Method for setting the parameter to 19 (for case where the previous parameter setting was 21).

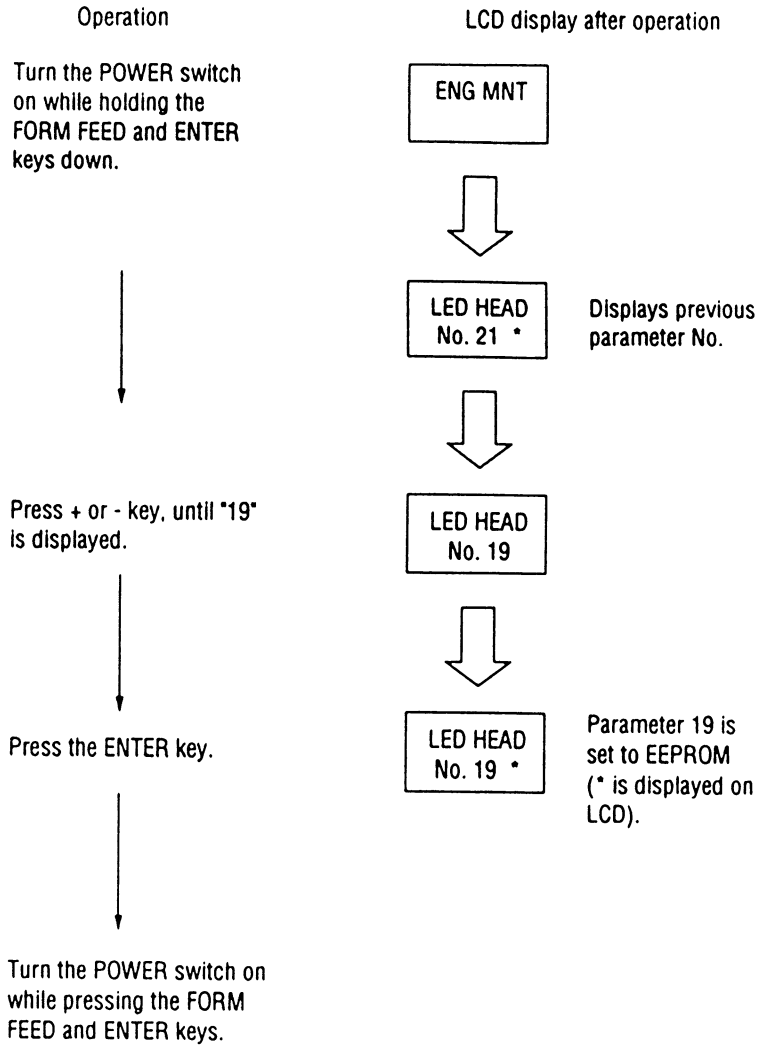

② LED head width setting

There are two types of LED head width or number of dots. The type of the LED head is distinguished by the serial No. label on the head. Set the LED Head Width on the Engine Menu accordingly. (Refer to Appendix C, **DIAGNOSTICS TEST**.)

- How to distinguish LED head width

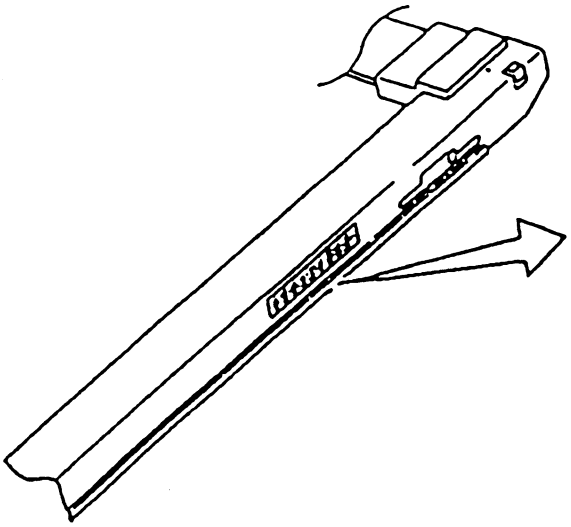

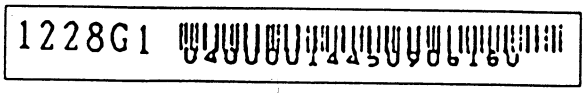

Narrow Type (2496 dots)

Full Type (2560 dots)

③ LED head type setting

There are two types of LED data wire: 1 wire type and 2 wires type. For this printer, 1 wire type is used. Select "300-1W" LED Head Wire on the Engine Menu. (Refer to Appendix C, **DIAGNOSTICS TEST**.)

- LED head data wire type

  300-1W: Data wire 1 wire type
  300-2W: Data wire 2 wires type

④ Uploading/Downloading EEPROM data

When the controller printed circuit board is replaced, the contents of the old EEPROM shall be copied to the new EEPROM on the new board to preserve customer settings. For the purpose, use the EEPROM operation on the Option of the Maintenance Driver. For details of this operation, refer to 4.3.1-④.)

5. PERIODICAL MAINTENANCE

5. PERIODICAL MAINTENANCE

5.1 Periodical Replacement Parts

The parts are to be replaced periodically as specified below:

Part name	Condition for replacement	Cleaning	Remarks
• Toner cartridge	About 2,000 sheets of paper have been printed.	• LED head.	Consumables
• Image drum cartridge	About 20,000 sheets of paper have been printed.		Consumables

5.2 Cleaning

Remove any toner or dust accumulated inside the printer. Clean in and around the printer with a piece of cloth when necessary. Use the handy cleaner (vacuum) to clean inside the printer.

Note: Do not touch the image drum, LED lens array, or LED head connector block.

5.2.1 Cleaning of LED Lens Array

Clean the LED lens array or replace the toner cartridge when white lines or stripes (void, light printing) are generated vertically down the page.

Note: The LED lens array must be cleaned with an LED head cleaner, provided with each toner kit.

White lines or stripes
(void, light printing)

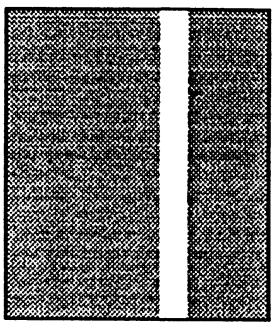

(1) Set the LED head cleaner to the LED lens array as shown in the figure, then slide the cleaner back and forth horizontally several times to clean the head.

Note: Gently press the LED head cleaner onto the LED lens array.

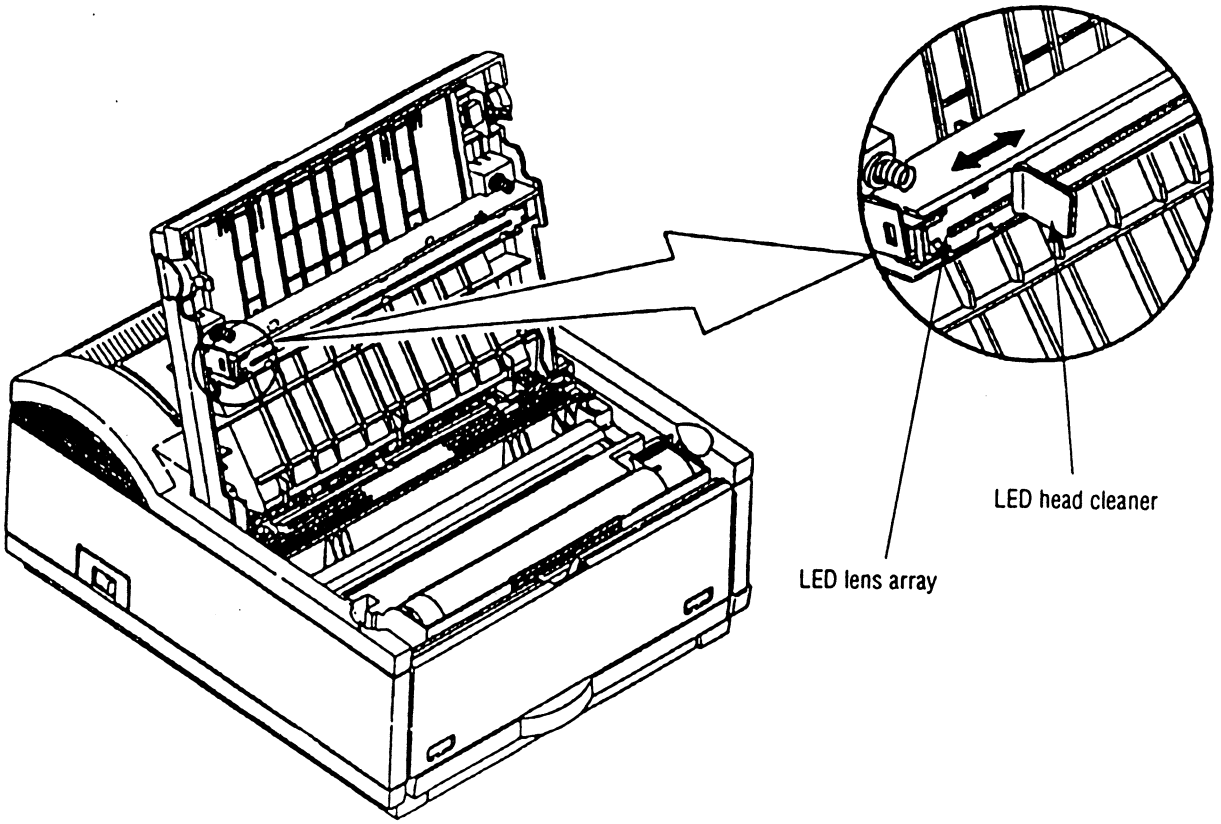

(2) Throw the cleaner away.

6. TROUBLESHOOTING PROCEDURES

6. TROUBLESHOOTING PROCEDURES

6.1 Troubleshooting Tips

(1) Check the basic check points covered in the user's manual.

(2) Gather as much information about the problem from the customer as possible.

(3) Inspect the equipment under the conditions close to those in which the problem had occurred.

6.2 Check Points before Correcting Image Problems

(1) Is the printer being used in proper ambient conditions?

(2) Are supplies (toner) and routine replacement parts (image drum unit) being replaced properly?

(3) Does the paper being used meet specifications?

(4) Is the image drum unit being loaded properly?

6.3 Tips for Correcting Image Problems

(1) Do not touch, or bring foreign matter into contact with the surface of the image drum.

(2) Do not expose the image drum to direct sunlight.

(3) Keep hands away from the fuser unit as it heats up during operation.

(4) Do not expose the image drum to light for longer than 5 minutes at room temperature.

6.4 Preparation for Troubleshooting

(1) PC display (OL600ex)

The failure status of the printer is displayed by the display of the PC. Take proper corrective action as directed by messages which are being displayed on the display of the PC.

There are 4 types of LED display status: On, Normal blinking, Fast blinking and Off.

Type	Function	Remarks
On	On-line (Ready), Warming up	
Normal blinking	Data receiving ~ Printing	0.5 sec. interval
Fast blinking	Recoverable alarm (paper end, cover open, etc.)	0.12 sec. interval
Off	Power off, Initializing, Unrecoverable alarm	

(2) Operator panel display (OL610ex)

The failure status of the printer is displayed by the liquid crystal display (LCD) of the operator panel. Take proper corrective action as directed by messages which are being displayed on the LCD.

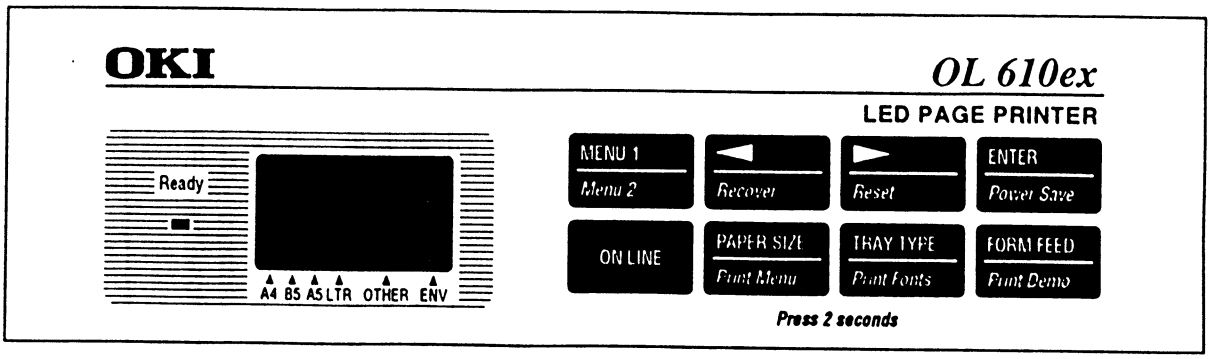

Status message display

Ready LED display

■ : OFF ▒ : BLINKING

▒ : ON □ : Undefined

6.5 Troubleshooting Flow

Should there be a problem with the printer, troubleshoot according to the following procedure flow:

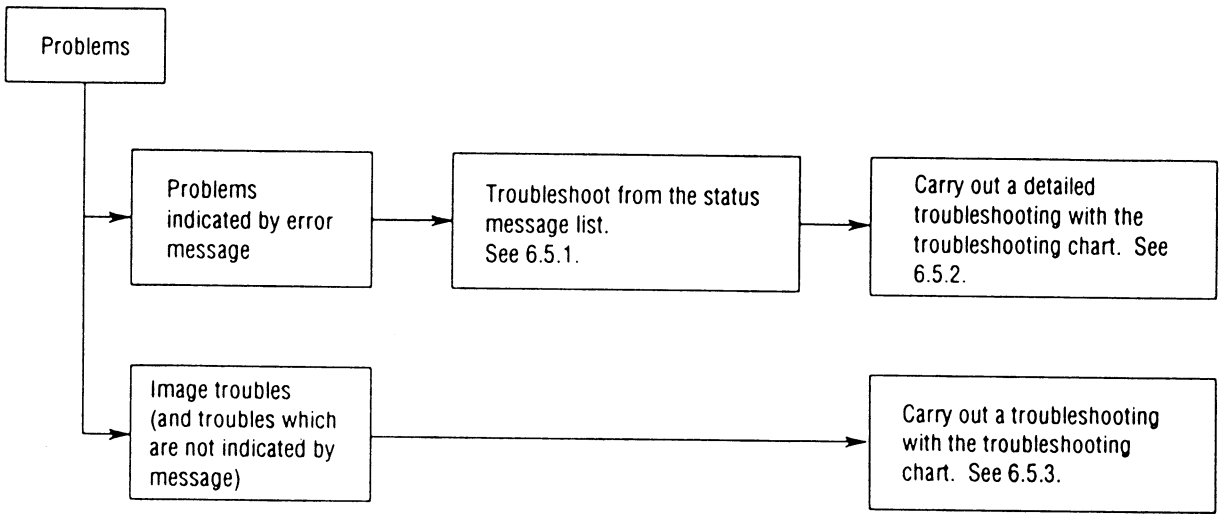

6.5.1 Status Message/Trouble List

The status and problems which may be displayed by messages on the LCD or PC display are listed in Table 6-1 (OL600ex) and 6-2 (OL610ex).

Table 6-1

Category	PC display status message	Trouble or status	Remedy
Controller errors	Controller Error	An error occured in the controller.	– Normal operation cannot be ensured. Turn the power off, then back on to restart. – If normal operation is not recovered by this restart procedure, replace the Main Control PCB.
	Program ROM Check Error	An error was detected by program ROM check.	– Replace the Main Control PCB. – When replacing the Main Control PCB, up-load/download the EEPROM data. (Refer to 4.3.1-④.)
	Font ROM Check Error	An error was detected by font ROM check.	– Replace the Main Control PCB. – When replacing the Main Control PCB, up-load/download the EEPROM data. (Refer to 4.3.1-④.)
	Resident RAM Check Error	An error was detected by resident RAM check.	– Replace the Main Control PCB. – When replacing the Main Control PCB, up-load/download the EEPROM data. (Refer to 4.3.1-④.)
	EEPROM Check Error	An error was detected by EEPROM check.	– Replace the Main Control PCB. – When replacing the Main Control PCB, up-load/download the EEPROM data. (Refer to 4.3.1-④.)

Table 6-1 (Cont'd)

Category	PC display status message	Trouble or status	Remedy
Controller errors	Optional Software ROM Check Error	An error was detected by optional software ROM check.	Check the optional software ROM board for proper connection or replace it.
	Optional RAM Check Error	An error was detected by optional RAM check.	– Check the optional RAM board for proper connection. – Check the mounting position of short plugs and additional RAM chips. (See 7.4.) – Replace the optional RAM board.
	FAN Motor Error	A fault occured in the fan motor.	– Check the fan motor for proper connection and for any presence of foreign matter in the fan. (See 6.5.2-⑤.) – Replace the fan motor or the Main Control PCB.
	Fuser Error	A fault occured in the fusing unit. (Timeout error, etc.)	See 6.5.2-④.
	Thermistor Open Check Error	A fault occured in the fusing unit. (Thermistor open check error)	See 6.5.2-④.
	Thermistor Short Check Error	A fault occured in the fusing unit. (Thermistor short check error)	See 6.5.2-④.
	SSIO Interface Error	Power supply board SSIO I/F error	Replace the power supply board or the Main Control PCB.

Table 6-1 (Cont'd)

Category	PC display status message	Trouble or status	Remedy
Controller errors	Second Tray Timeout Error	I/F timeout occured between the Main Control Board and the 2nd Tray.	Check the 2nd tray for proper connection.
	Multipurpose Feeder Timeout Error	I/F timeout occured between the Main Control Board and the multi feeder.	Check the multi feeder for proper connection.
	Watch Dog Timeout Error	A watch dog timeout occured.	– Turn the power off, then back on to recover from the error. – Replace the Main Control PCB. When replacing the Main Control PCB, up-load/download the EEPROM data. (Refer to 4.3.1-④.)
Cover open	Cover Open	The upper cover was opened.	– Check the cover to release the error display. – If the display does not change after this procedure, replace the power supply board.
Jam errors	Paper Input Jam	A jam occured during paper hopping from the tray being displayed. Tray: Tray1, Tray2, Feeder	– Check the paper in the cassette. Open and then close the cover. When the cover is closed, recovery printing is carried out and the error display is released. – If this error occurs frequently, see 6.5.2 ②-1.

Table 6-1 (Cont'd)

Category	PC display status message	Trouble or status	Remedy
Jam errors	Paper Feed Jam	A jam occured during paper feeding after completion of paper hopping from the tray being displayed.	– Check the paper in the cassette. Open and then close the cover. When the cover is closed, recovery printing is carried out and the error display is released. – If this error occurs frequently, see 6.5.2 ②-2.
	Paper Exit Jam	Jam occured during paper ejecting.	– Check the paper in the cassette. Open and then close the cover. When the cover is closed, recovery printing is carried out and the error display is released. – If this error occurs frequently, see 6.5.2 ②-3.
Paper size error	Paper Size Error	Paper of improper size is being fed from the tray being displayed.	– Check the paper in the tray or heck to see if more than one sheet of paper were being fed simultaneously. – Set the designated paper in the tray. – Open the cover, then close it to carry out recovery printing and release the error display. – If this error occurs frequently, see 6.5.2-③.

Table 6-1 (Cont'd)

Category	PC display status message	Trouble or status	Remedy
Tray paper out	Tray# Paper Out	The tray being displayed has run out of paper. Tray#: Standard Tray, Second Tray, Multipurpose Feeder #: Executive, Letter, Legal14, Legal13, A4, A5, A6, B5, Monarch, COM-10, COM-9, DL, C5	Load paper in the tray.
Size errors	Tray# #Paper Request	Loading of paper indicated by the second line message to the first line's tray is requested. Tray#: Standard Tray, Second Tray, Multipurpose Feeder, Manual #: Executive, Letter, Legal14, Legal13, A4, A5, A6, B5, Monarch, COM-10, COM-9, DL, C5	Load the requested paper in the tray.
Buffer overflow	Receive Buffer Overflow	The receive buffer is overflowing.	
	Page Buffer Overflow	The page buffer is overflowing because it received too much data for printing on the page.	
	DLL Buffer Overflow	The DLL buffer is overflowing.	
	Macro Buffer Overflow	Macro buffer is overflowing.	

Table 6-1 (Cont'd)

Category	PC display status message	Trouble or status	Remedy
Buffer overflow	Send Buffer Overflow	The send buffer is overflowing.	Normal operation
	Print Overrun Error	The printer overrun because the print data is too complicated to be printed.	
Daily status	Ready Warming Up	The printer is warming up.	
	Initializing	Message displayed to indicate that the controller is undergoing an initialization when the power is turned on.	
	Ready	The printer is the on-line mode.	
	Ready Power Saving	The printer is in the power-saving mode.	
	Printing Demo	The printer is printing a demo page.	
	Printing Menu	The printer is printing a menu page.	
	Printing Fonts	The printer is printing a font page.	
	Printing	The printer is printing a page.	
	Ejecting	The printer is ejecting a page.	

Table 6-1 (Cont'd)

Category	PC display status message	Trouble or status	Remedy
Daily status	Manual Paper In	There is a paper on the manual tray.	
	Reset	The data which remained unprinted in the buffer is deleted and the printer is initialized to user default settings. The temporary DLLs and macro are deleted.	
	Ready Toner Low Ready Toner Sensor Problem	Toner is running out. Normal operation can be continued.	– Replace the toner cartridge.
	Toner Sense	A fault occurred in the toner sensor. Normal operation can be continued.	– Replace the power supply board.
	Ready Change Drum Unit	Image drum is running out. Normal operation can be continued.	– Replace the image drum unit. – After replacing the drum unit, reset the drum counter. (Refer to the User's Manual.)

Table 6-2

Category	LCD status message	Trouble or status	Remedy
Controller errors	■ ERROR 0n aaaaaaaa	An error occurred in the controller. n = Exception Code aaaaaaa = Error Address	– Normal operation cannot be ensured. Turn the power off, then back on to restart. – If normal operation is not recovered by this restart procedure, replace the Main Control PCB.
	■ ERROR nn	An error occurred in the controller.	– Turn the power off, then back on to recover from the error. – If the normal operation is not recovered by this restart procedure, use the following remedial actions.

Table 6-2 (Cont'd)

Category	LCD status message	Trouble or status		Remedy
Controller errors	■ ERROR nn	Code (nn)	Error	Remedy
		0n	A fault occurred in the controller. n = Exception Code	Replace the Main Control PCB.
		10	An error was detected by program ROM check.	Replace the Main Control PCB.
		20	An error was detected by font ROM check.	Replace the Main Control PCB.
		30	An error was detected by resident RAM check.	Replace the Main Control PCB.
		40	An error was detected by EEPROM check.	– Replace the EEPROM or Main Control PCB. – EEPROM
		50	An error was detected by optional software ROM check.	Check the optional software ROM board for proper connection or replace it.

Table 6-2 (Cont'd)

Category	LCD status message	Trouble or status		Remedy
Controller errors	■ ERROR nn	Code (nn)	Error	Remedy
		60	An error was detected by optional RAM check.	– Check the optional RAM board for proper connection. – Check the mounting position of short plugs and additional RAM chips (see 7.4). – Replace the option RAM board.
		70	A fault occurred in the Fan motor.	– Check the fan motor for proper connection and for any presence of foreign matter in the fan (see 6.5.2-⑤). – Replace the fan or the Main Control PCB.
		71	A fault occurred in the fuser (timeout error etc.).	See 6.5.2-④.
		72	A fault occurred in the fuser (thermistor open error).	See 6.5.2-④.
		73	A fault occurred in the fuser (thermistor short error).	See 6.5.2-④.
		74	Power supply board SSIO I/F error	Replace the power supply board or the Main Control PCB.
		80	I/F timeout occurred between the Main Control PCB and the operator panel.	– Check the operator panel for proper connection. – Replace the flexible cable, operator panel or Main Control PCB.

Table 6-2 (Cont'd)

Category	LCD status message	Trouble or status		Remedy
Controller errors	■ ERROR nn	Code (nn)	Error	Remedy
		81	I/F timeout occurred between the Main Control PCB and the optional tray (2nd tray, envelope feeder, etc.).	Check the optional tray for proper connection.
		90	A watchdog timer timeout occurred.	– Turn the power off, then back on to recover from the error. – Replace the Main Control PCB.
		91	Invalid CPU was used.	– Check valid CPU list.
Cover open	■ COVER OPEN	The upper cover was opened.		– Close the cover to release the error display. – If the display does not change after this procedure, replace the power supply board.
Jam errors	■ tray INPUTJAM	A jam occurred during paper hopping from the tray being displayed . tray: TRAY 1, TRAY 2, FEEDER		– Check the paper in the cassette. Open and then close the cover. When the cover is closed, recovery printing is carried out and the error display is released. – If this error occurs frequently, see 6.5.2 ②-1.

Table 6-2 (Cont'd)

Category	LCD status message	Trouble or status	Remedy
Jam errors	■ tray FEED JAM	A jam occurred during paper feeding after completion of paper hopping from the tray being displayed. tray: TRAY 1, TRAY 2, FEEDER	– Open the cover, remove the paper, then close the cover. When the cover is closed, recovery printing is carried out and the error display is released. – If this error occurs frequently, see 6.5.2 ②-2.
	■ PAPER EXIT JAM	Jam occurred during paper ejecting.	– Open the cover, remove the paper, then close the cover. When the cover is closed, recovery printing is carried out and the error display is released. – If this error occurs frequently, see 6.5.2 ②-3.
Paper size error	■ tray SIZE ERR	Paper of improper size is being fed from the tray being displayed. tray: TRAY 1, TRAY 2, FEEDER	– Check the paper in the tray or check to see if more than one sheet of paper were being fed simultaneously. – Set the designated paper in the tray. – Open the cover, then close it to carry out recovery printing and release the error display. – If this error occurs frequently, see 6.5.2-③.
Tray paper out	■ tray PAPEROUT	The tray being displayed has run out of paper. tray: TRAY 1, TRAY 2, FEEDER	Load paper in the tray.

Table 6-2 (Cont'd)

Category	LCD status message	Trouble or status	Remedy
Size error	■ tray #REQUEST	Loading of paper indicated by the second line message to the first line's tray is requested. tray: TRAY 1, TRAY 2, FEEDER #: LETTER, EXECUTIV, LEGAL 14, LEGAL 13, A4 SIZE, A5 SIZE, A6 SIZE, B5 SIZE, FREE SIZE	Load the requested paper in the tray.
	■ MANUAL #REQUEST	Manual loading of paper indicated by the second line message is requested. The paper size one of the followings: #: LETTER, EXECUTIV, LEGAL 14, LEGAL 13, A4 SIZE, A5 SIZE, A6 SIZE, B5 SIZE, FREE SIZE, COM-10, MONARCH, DL ENV, C5 ENV	Load the requested paper in the manual tray.

Table 6-2 (Cont'd)

Category	LCD status message	Trouble or status	Remedy
Buffer overflow	REC BUFF OVERFLOW	The receive buffer is overflowing.	– Press the operator panel RECOVER key to release the error display. – Change the setting of the host or printer so the host can detect the busy status of the printer. Resend the data from the host to the printer. – Replace the interface cable or control board.
	PAGE BUF OVERFLOW	The page buffer is overflowing because it received too much data for printing on the page.	– Press the operator panel RECOVER key to release the error display. – Install additional optional RAM board or reduce the print data.
	DLL BUFF OVERFLOW	The DLL buffer is overflowing.	– Press the operator panel RECOVER key to release the error display. – Install additional optional RAM board or reduce the DLL data.
	MACRO OVERFLOW	Macro buffer is overflowing.	– Press the operator panel RECOVER key to release the error display. – Install additional optional RAM board or reduce the macros.
	PRINT OVERRUN	The printer overrun because the print data is too complicated to be printed.	– Press the operator panel RECOVER key to release the error display. – Simplify page data formatting.

Table 6-2 (Cont'd)

Category	LCD status message	Trouble or status	Remedy
Daily status	■ OFF-LINE emulate	The printer is in the off-line mode. The second line indicates the emulation. emulate: HP4, AdobePS	Normal operation.
	□ PROCS'NG	Post Script mode only. The printer is processing data	
	□ WAITING	Post Script mode only. The printer is in the middle of a job and waiting for data to be processed.	
	□ PRINTING	The printer is printing a page.	

Table 6-2 (Cont'd)

Category	LCD status message	Trouble or status	Remedy
Daily status	DATA HP4	The printer is processing data in on-line mode. Ready ON: The data that is not printed remains in the buffer. Ready flashing: The printer is receiving data.	Normal operation.
	PRINT FONTS	All fonts of the printer are being printed during self-test.	
	PRINT MENU	The current menu setting is being printed. Ready ON: Executed by command entry. Ready flashing: Executed by key operation.	

Table 6-2 (Cont'd)

Category	LCD status message	Trouble or status	Remedy
Daily status	PRINT DEMO	The demo page is being printed.	Normal operation.
	nnn/mmm CPYnn/mm	When the number of copies being printed is two or more, the number of copies being printed is displayed. This message is displayed together with another message on the first line.	
	PR BUSY	Post Script mode only This message is displayed when ON-LINE key is pressed when the printer is processing the job, if the JOB RESET menu is OFF. The printer will go off-line after completing the job.	

Table 6-2 (Cont'd)

Category	LCD status message	Trouble or status	Remedy
Daily status	■ RESET TO FLUSH	Post Script mode only This message is displayed when ON-LINE key is pressed while the printer is processing the job, if the JOB RESET menu is ON. Even while this message is being displayed, the printer continues to process processing the job normally.	- Press ON-LINE key again The printer goes back to on-line mode and continues processing the job. - Press RESET key. The job is cancelled.
	□ FLUSHING	Post Script mode only This message is displayed during cancelling of a job. The message goes off when the job cancellation is completed.	Normal operation.
	■ RESET	The data which remained unprinted in the buffer is deleted and the printer is initialized to user default settings. The temporary DLLs and macros are deleted.	

Table 6-2 (Cont'd)

Category	LCD status message	Trouble or status	Remedy
Daily status	■ RESET TO SAVE	This message is displayed when the printer cannot reset automatically to exit from the menu because there are data and DLL's and macros having temporary attributes when the printer is changed from set mode to other mode.	Normal operation.
	□ TONERLOW	Toner is running out. This message is displayed together with other message on the first line. Normal operation can be continued.	– Replace the toner cartridge.
	□ TONERSNS	A fault occurred in the tonersensor. This message is displayed together with other message on the first line. Normal operation can be continued.	– Replace the power supply board.
	□ CHG DRUM	This message is displayed together with other message on the first line. Normal operation can be continued.	– Replace the image drum cartridge. – After replacing the drum cartridge, reset the drum counter (refer to the User's Manual).

Table 6-2 (Cont'd)

Category	LCD status message	Trouble or status	Remedy
Daily status	▭ PWR SAVE	The printer is in the power-saving mode. This message is displayed together with other message on the first line.	Normal operation.
	▬ ERROR PS AdobePS	PostScript mode only This message will appear when the interpreter detects an error during a job processing. The remainder of the job will be ignored.	- Check the printer setting of the host. - Check the printer job data to see if there is any un-supported or illegal operation in the data.

6.5.2 Status Message Troubleshooting

If the problems are not correctable by using the status message trouble list, follow the troubleshooting flowcharts given here to deal with them.

No.	Trouble	Flowchart number
1.	The printer does not work normally after the power is turned on.	①-1 (OL600ex) ①-2 (OL610ex)
2.	Jam alarm ├ Paper input jam ├ Paper feed jam └ Paper exit jam	 ②-1 ②-2 ②-3
3.	Paper size error	③
4.	Fusing unit error	④
5.	Fan error	⑤

①-1 The printer does not work normally after the power is turned on. (OL600ex)

• Turn the power off, then back on.

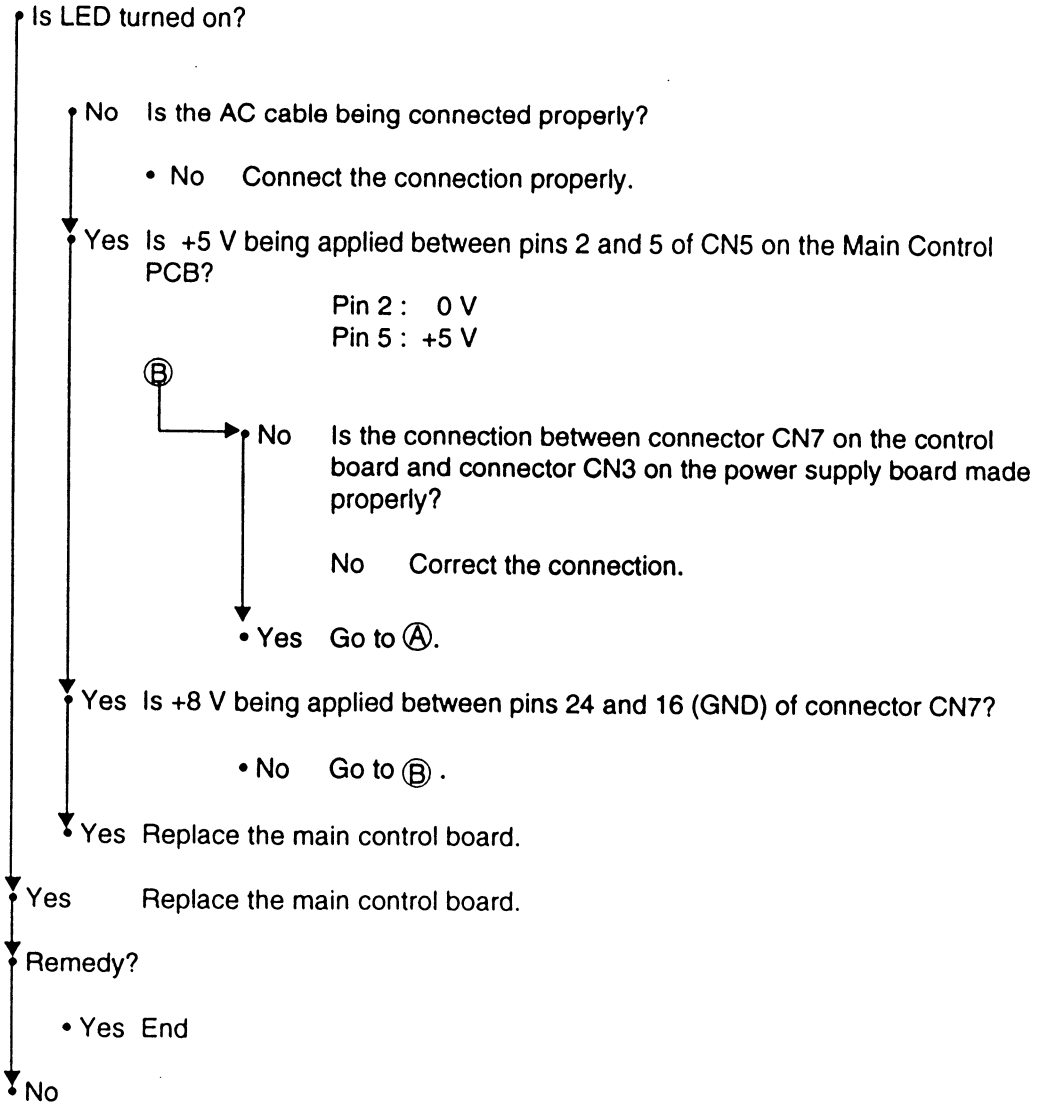

Ⓐ

Take the measurement of the following voltages at connector CN2 on the power supply board:

Voltage between pins 1 and 3: ... about 28 V AC
Voltage between pins 5 and 6: ... about 10 V AC Are the voltages normal?

- Yes Is fuse F3 on the power supply board open?
  - No Replace the power supply board.
  - Yes Replace fuse F3 (if it blows again, check the resistance of the registration and drum motors (see 7.3). If the resistance is wrong, replace motors or replace the power supply board or Main Control PCB).
- No Is the AC input voltage output between pins 1 and 2 of connector CN1 on the power supply board normal?
  - Yes Replace the AC transformer.
- No Is fuse F1 or F2 on the power supply board open?
  - No Replace the power supply board.
- Yes Replace open fuse F1 or F2 (if is opens again, replace the power supply board).

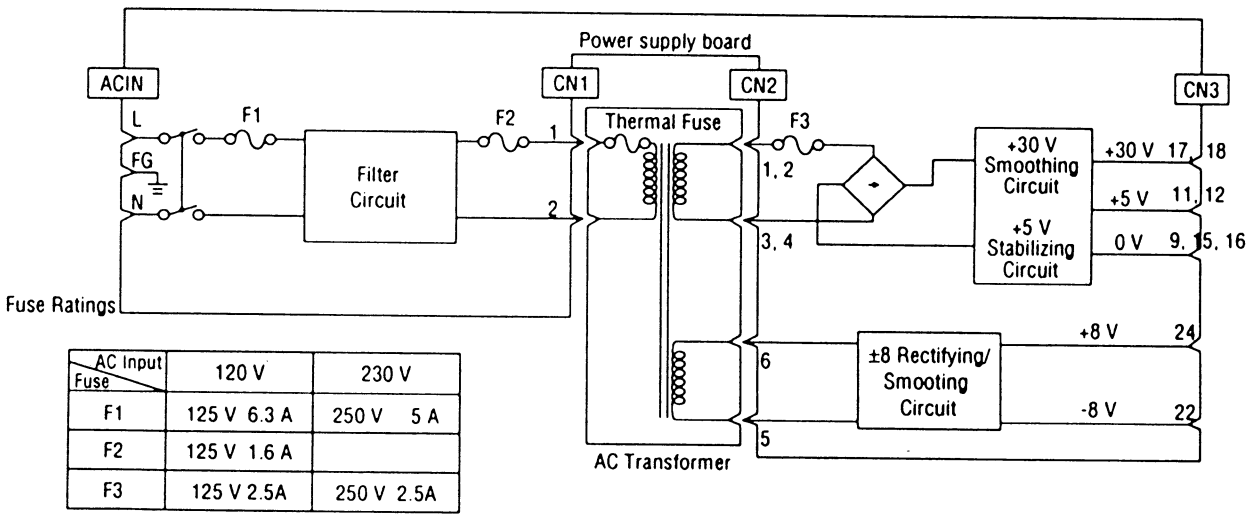

AC Input / Fuse	120 V	230 V
F1	125 V 6.3 A	250 V 5 A
F2	125 V 1.6 A	
F3	125 V 2.5A	250 V 2.5A

Figure 6-1 Low-voltage Power Supply Block Diagram

①-2 The printer does not work normally after the power is turned on. (OL610ex)

• Turn the power off, then back on.

• Is all ■'s message being displayed by the LCD display? 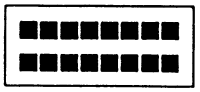

  • No Is the AC cable being connected properly?

    • No Connect the cable properly.

  • Yes Is +5 V being applied between pins 2 and 5 of CN5 on the Main Control PCB?

    Pin 2 : 0 V
    Pin 5 : +5 V

    Ⓑ

    • No Is the connection between connector CN7 on the main control board and connector CN3 on the power supply board made properly?

      No Correct the connection.

    • Yes Go to Ⓐ.

  • Yes Is +8 V being applied between pins 24 and 16 (GND) of connector CN7?

    • No Go to Ⓑ.

  • Yes Is the flexible cable for the operator panel assy being connected to the connector CN5 on the Main Control PCB and the connector CN1 on the OLCC board properly?

    • No Connect the flexible cable properly.

  • Yes Replace the operator panel assy or flexible cable.

  • Remedy?

    • No Replace the Main Control PCB.

  • Yes End

• Yes Is [INITIAL-IZING] message being displayed by the LCD display?

  • No Replace the Main Control PCB.

• Yes Is [ON-LINE Adobe PS] message being displayed by the LCD display?

  • No Take actions following the LCD message list (see 6.5.1 for correct actions).

Yes Replace the Main Control PCB.

Remedy?

• Yes End

No

Ⓐ

Take the measurement of the following voltages at connector CN2 on the power supply board:

Voltage between pins 1 and 3: ... about 28 V AC
Voltage between pins 5 and 6: ... about 10 V AC Are the voltages normal?

Yes Is fuse F3 on the power supply board open?

• No Replace the power supply board.

• Yes Replace fuse F3 (if it blows again, check the resistance of the registration and drum motors (see 7.3). If the resistance is wrong, replace motors or replace the power supply board or Main Control PCB).

No Is the AC input voltage output between pins 1 and 2 of connector CN1 on the power supply board normal?

• Yes Replace the AC transformer.

No Is fuse F1 or F2 on the power supply board open?

• No Replace the power supply board.

Yes Replace open fuse F1 or F2 (if is opens again, replace the power supply board).

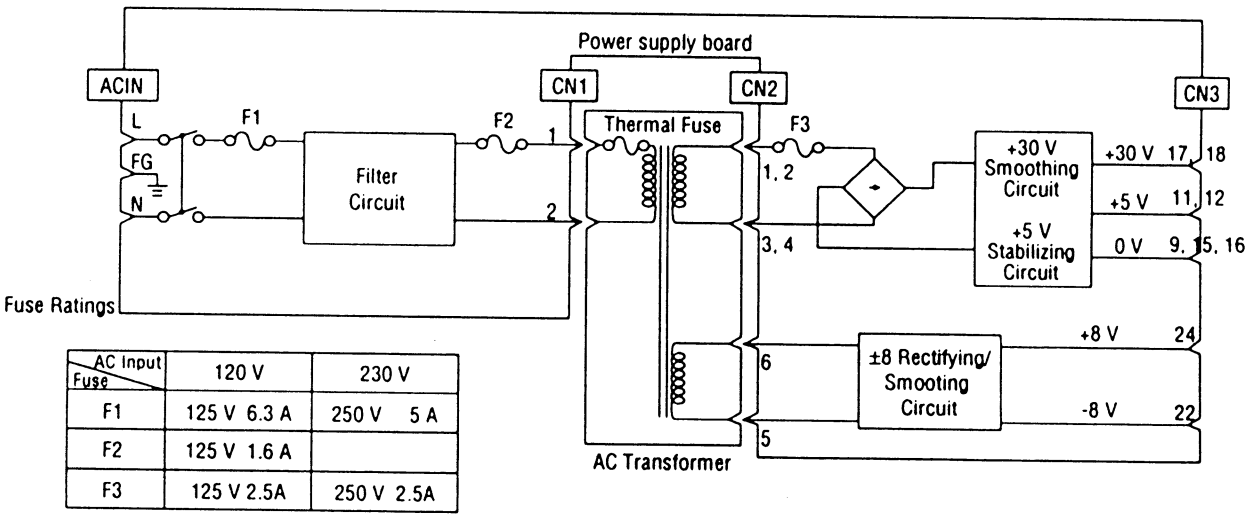

AC Input / Fuse	120 V	230 V
F1	125 V 6.3 A	250 V 5 A
F2	125 V 1.6 A	
F3	125 V 2.5A	250 V 2.5A

Figure 6-1 Low-voltage Power Supply Block Diagram

[JAM error]

②-1 Paper input jam

- Does the JAM error occur when the power is turned on?
  - Yes — Is the paper at the inlet sensor?
    - • Yes — Remove the paper.
    - No — Is the operation of the inlet sensor lever normal (moves freely when touched)?
      - • No — Replace the inlet sensor lever.
      - Yes — Clean the inlet sensor on the power supply board, or replace the power supply board.
  - No — Does the JAM alarm occur after paper feeding?
    - Yes — Is the paper fed to the inlet sensor lever?
      - • Yes — Is the operation of the input sensor lever normal (moves freely when touched)?
        - • No — Replace the inlet sensor lever.
        - Yes — Clean the inlet sensor on the power supply board or replace the power supply board.
      - No — Replace the hopping roller rubber or separator assy.
  - No — Is the hopping roller rotating?
    - • Yes — Set the paper tray properly.
  - No — Is the registration motor rotating?
    - • Yes — Replace the one-way clutch gear of the hopping roller assembly.
  - No — Is connector CN3 on the control board being connected properly?
    - • No — Connect connector CN3 properly.
  - Yes — Is the coil resistance (normal resistance: about 18.6 Ω) of the registration motor normal (see 7.3)?
    - • No — Replace the registration motor.
  - Yes — Replace the Main Control PCB.

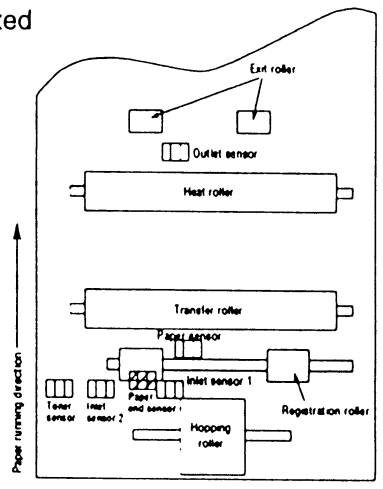

[JAM error]

②-2 Paper feed jam

- Does the paper feed jam occur when the power is turned on?
  - Yes — Is the paper on the paper sensor lever?
    - • Yes — Remove the paper.
  - No — Is the operation of the paper sensor lever normal (moves freely when touched)?
    - • No — Replace the paper sensor lever.
  - Yes — Replace the power supply board.
- No — Has the paper reached the paper sensor lever?
  - No — Is the registration roller rotating?
    - • No — Replace the one-way clutch gear.
  - Yes — Is the image drum unit being set properly?
    - • No — Set the image drum unit properly.
  - Yes — Check the hopping roller assembly or separator assy.
- Yes — Has the paper reached the outlet sensor lever?
  - Yes — Is the operation of the outlet sensor lever normal (moves freely when touched)?
    - • No — Replace the outlet sensor lever.
    - • Yes — Clean the outlet sensor on the power supply board or replace the power supply board.
- No — Is the drum motor rotating?
  - No — Is connector CN2 on the Main Control PCB being connected?
    - • No — Connect connector CN2 properly.
  - Yes — Is the coil resistance (normal resistance: about 12.6 Ω) of the drum motor correct (refer to 7.3)?
    - • No — Replace the drum motor.

②-2-a ②-2-b

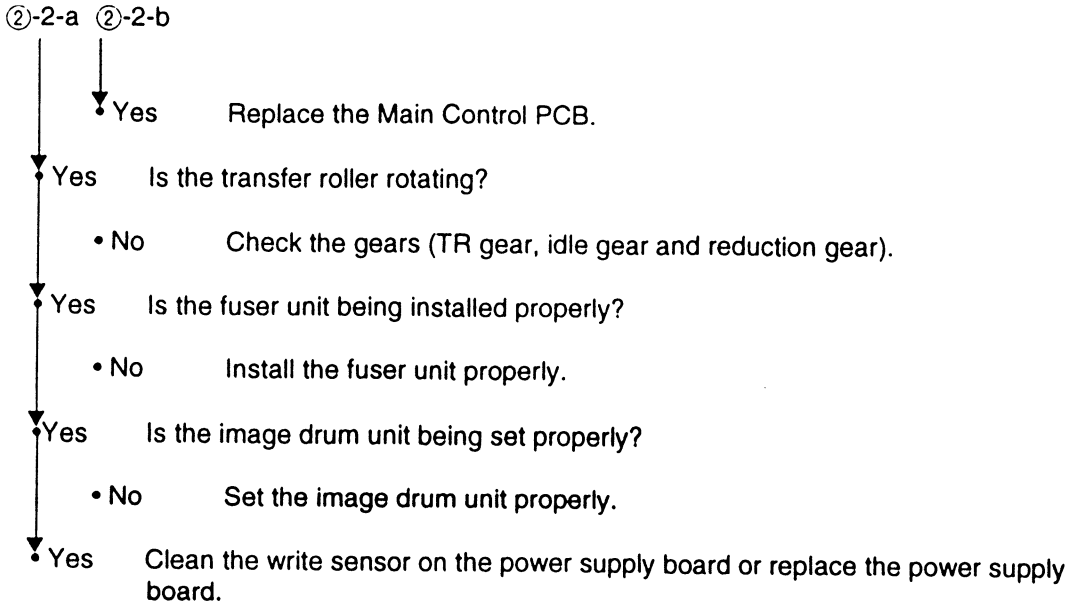
②-2-a
②-2-b
Yes
Replace the Main Control PCB.
Yes
Is the transfer roller rotating?
• No
Check the gears (TR gear, idle gear and reduction gear).
Yes
Is the fuser unit being installed properly?
• No
Install the fuser unit properly.
Yes
Is the image drum unit being set properly?
• No
Set the image drum unit properly.
Yes
Clean the write sensor on the power supply board or replace the power supply board.

[JAM error]

②-3 Paper exit jam

- Does the paper exit jam error occur when the power is turned on?
  - Yes — Is the paper on the outlet sensor lever?
    - • Yes — Remove the paper.
  - No — In the operation of the outlet sensor lever normal (moves freely when touched)?
    - • No — Replace the outlet sensor lever.
  - Yes — Clean the outlet sensor on the power supply board or replace the power supply board.
- No — Is the face-up stacker pulled out completely from the printer or, pushed into the printer completely?
  - • No — Pull the face-up stacker out of the printer completely or push it into the printer completely.
- Yes — Is the eject roller assembly being installed properly?
  - • No — Install the eject roller assembly properly.
- Yes — Has the coil spring come off the eject roller assembly?
  - • Yes — Install the coil spring to the eject roller assembly.
- No — Replace the eject roller assembly.

③ Paper size error

- Is paper of the specified size being used?
  - No — Use paper of the specified size.
- Yes — Are inlet sensor levers 1 and 2 operating properly (moves freely when touched)?
  - No — Replace the inlet sensor lever or clean the inlet sensor on the power supply board.
- Yes — Does the outlet sensor lever operate properly (moves freely when touched)?
  - No — Replace the outlet sensor lever or clean the outlet sensor on the power supply board.
- Yes — Replace the power supply board.

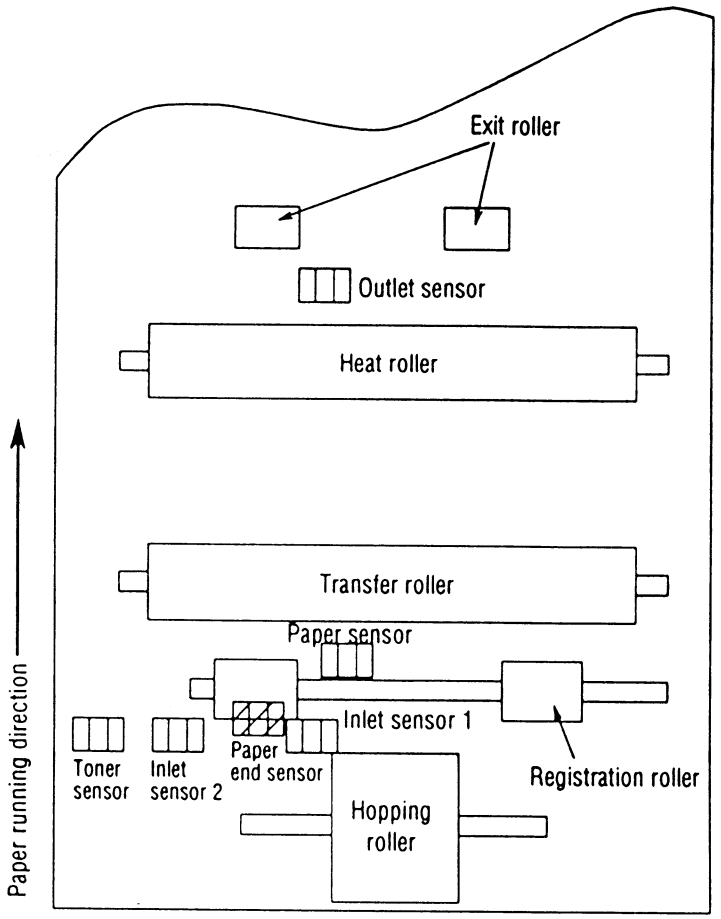

④ Fusing unit error (ERROR 71) (ERROR 72) (ERROR 73)

• Turn the power off, then back on.

• Does the fusing unit error occur immediately?

  • Yes — Is the thermistor open or shorted? Measure the resistance between thermistor contacts (about 220kΩ at room temperature) (see Fig. 6-2 or see 7.3).

    • Yes — Replace the fusing unit.

  • No — Do the thermistor contacts touch the contact assembly properly when the fusing unit is mounted in the printer (see Fig. 6-4 contact Ⓕ)?

    • No — Adjust the contact.

  • Yes — Replace the Main Control PCB or power supply board.

• No — Does the fusing unit error occur about 60 seconds after the power is turned on?

  • No — Check the thermistor for poor contact or replace the Main Control PCB.

• Yes — Turn the power off, then back on.

• Is the heater of the fusing unit turned on (when the heater is turned on, light is emitted)?

  • Yes — Check thermistor contacts or replace the Main Control PCB or the fuser unit.

• No — Is the heater or the thermostat open?
Measure the resistance between the heater contacts (normal resistance: about 0Ω) (see Fig. 6-2 or see 7.3).

  • Yes — Replace the fusing unit.

• No — Is the AC voltage being supplied to the contacts for the heater of the contact assembly? (Refer Fig. 6-2)

  • No — Replace the Main Control PCB or the power supply board.

• Yes — Check the heat contact of the fusing unit and the contact assembly for poor contact (see Fig. 6-4 contact Ⓖ).

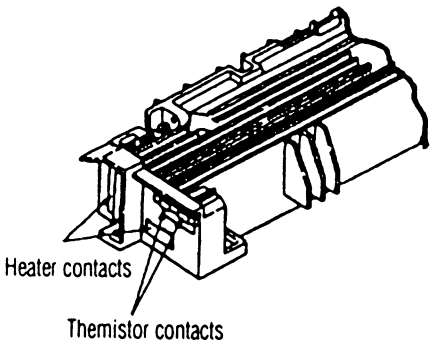

Figure 6-2

⑤ Fan error (ERROR 70)

- Is the fan rotating?
  - • Yes — Replace the Main Control PCB.
- No — Is connector CN1 on the Main Control PCB being connected?
  - • No — Connect connector CN1.
- Yes — Replace the fan or Main Control PCB (check coil resistance of the fan, See 7.3).

6.5.3 Image Troubleshooting

Procedures for troubleshooting for the cases of abnormal image printouts are explained below. Figure 6-3 below shows typical abnormal images.

Problem	Flowchart number
Images are light or blurred entirely (Figure 6-3, Ⓐ)	①
Dark background density (Figure 6-3, Ⓑ)	②
Blank paper is output (Figure 6-3, Ⓒ)	③
Black vertical stripes (Figure 6-3, Ⓓ)	④
Cyclical defect (Figure 6-3, Ⓔ)	⑤
Print voids	⑥
Poor fusing (images are blurred or peeled off when touched by hands)	⑦
White vertical streaks (Figure 6-3, Ⓕ)	⑧

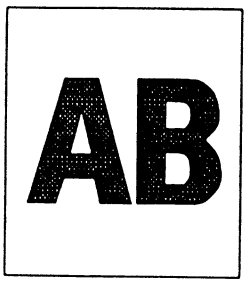

Ⓐ Light or blurred images entirely

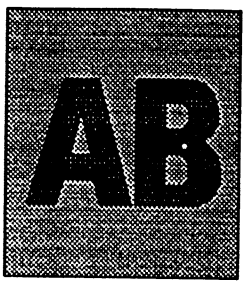

Ⓑ Dark background density

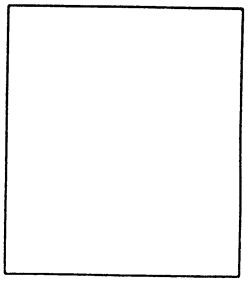

Ⓒ Blank paper

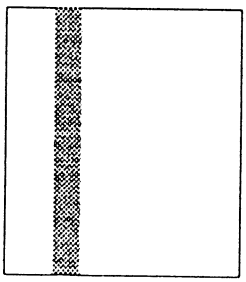

Ⓓ Black vertical stripes

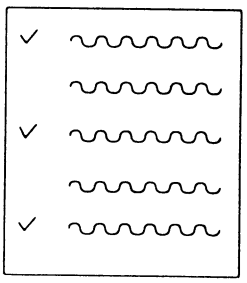

Ⓔ Cyclical defect

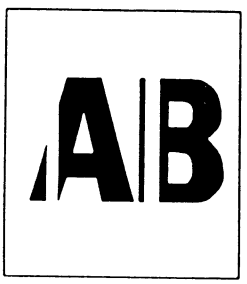

Ⓕ White vertical belts or streaks

Figure 6-3

① Images are light or blurred entirely.

- Is toner low (is the TONER LOW message displayed)?
  - • Yes — Supply toner.
- No — Is paper of the specified grade being used?
  - • No — Use paper of the specified grade.
- Yes — Is the lens surface of the LED head dirty?
  - • Yes — Clean the lens.
- No — Is the LED head being installed properly (check connector CN4 of the control board and PC connector on the LED head for proper connection)?
  - • No — Install the LED head properly.
- Yes — Is the contact plate of the transfer roller in contact with the contact assembly of the power supply board properly (see Fig. 6-5)?
  - • Adjust the contact plate of the transfer roller to make a proper contact with the power supply board and shaft of the transfer roller.
- Yes — Are the contact of the developing roller and the contact of the toner supply roller of the image drum unit in comtact with the contact assembly properly (see Fig. 6-4 Ⓐ and Ⓑ)?
  - • No — Adjust the contacts of the developing and toner supply roller to make a proper contact with the contact assembly.
- Yes — Replace the transfer roller.
- Has the problem been removed?
  - • Yes — End
- No — Replace the image drum unit.
- Has the problem been removed?
  - • Yes — End

    Note: After replacing the image drum unit, set the printer in the user maintenance mode by turning the power on while pressing the MENU key and reset the drum counter (see User's Manual).
- No — Replace the control board or power supply board.

② Dark background density

Has the image drum been exposed to external light?

- Yes — Mount the image drum in the printer and wait about 30 minutes.

No — Is the heat roller of the fusing unit dirty?

- Yes — Clean the heat roller.

No — Is the contact of the cleaning roller of the image drum unit in contact with the contact assembly properly (see Fig. 6-4 Ⓒ)?

- No — Adjust the contact of the cleaning roller to make a proper contact with the contact assembly.

Yes — Replace the image drum unit.

Has the problem been removed?

- Yes — End

Note: After replacing the image drum unit, set the printer in the user maintenance mode by turning the power on while pressing the MENU key, and reset the drum counter (see User's Manual).

No — Replace the Main Control PCB or power supply board.

③ Blank paper is output.

Is the LED head being connected properly (check connector CN4 on the Main Control PCB and PC connector on the LED head)?

- No — Connect the LED head properly or replace the head cable.

Yes — Is the contact of the image drum unit in proper contact with the ground contact properly (see Fig. 6-4 Ⓓ)?

- No — Check the ground contact of the image drum unit.

Yes — Replace the LED head.

Has the problem been removed.

- Yes — End

Note: After replacing the LED head, set the printer in the engine maintenance mode by turning the power on while pressing the FORM FEED and ENTER keys. Set the LED head drive time if the luminous rating of the old LED head and new the LED head are different (see 4.2).

No — Replace the Main Control PCB or power supply board.

④ Black vertical belts or stripes

• Replace the image drum unit.

• Has the problem been removed?

• Yes End

Note: After replacing the image drum unit, set the printer in the user maintenance mode by turning the power on while pressing the MENU key, and reset the drum counter (see User's Manual).

• No Replace the LED head.

• Has the problem been removed.

• Yes End

Note: After replacing the LED head, set the printer in the engine maintenance mode by turning the power on while pressing the FORM FEED and ENTER keys. Set the LED head druve time if the luminous rating of the old LED head and the new LED head are different (see 4.2).

• No Replace the Main Control PCB or power supply board.

⑤ Cyclic error

	Frequency	Remedy
Image drum	3.71" (94.2 mm)	Replace or clean the image drum unit.
Developing roller	1.66" (44.4 mm)	Replace the image drum unit.
Toner supply roller	2.27" (57.8 mm)	Replace the image drum unit.
Charging roller	1.56" (39.6 mm)	Replace the image drum unit.
Cleaning roller	1.24" (31.4 mm)	Replace the image drum unit.
Transfer roller	2.01" (51.0 mm)	Replace the transfer roller.
Heat roller	2.47" (62.8 mm)	Replace the fusing unit assy.
Back-up roller	2.72" (69.08 mm)	Replace the back-up roller.

Notes:

1. After replacing the image drum unit, set the printer in the user maintenance mode by turning the power on while pressing the MENU key, and reset the drum counter (see User's Manual).

2 After replacing the fusing unit assy, set the printer in the engine maintenance mode by turning the power on while pressing the FORM FEED and ENTER keys, and reset the fuser counter (see 4.1).

⑥ Print voids

• Is the contact plate of the transfer roller in proper contact with the power supply board (see Fig. 6-5)?

  • No Adjust the contact plate so that it touches the power supply board and the shaft of the transfer roller properly.

• Yes Replace the transfer roller.

• Has the problem been removed.

  • Yes End

• No Are the contacts of the toner supply roller, developing roller, image drum and charging roller in proper contact with the contact assy (see Fig. 6-4 Ⓐ, Ⓑ, Ⓒ, Ⓓ, Ⓔ)?

  • No Adjust the contacts so that they touch the contact assy properly.

• Yes Replace the image drum unit.

• Has the problem been removed?

  • Yes End

    Note: After replacing the image drum unit, set the printer in the user maintenance mode by turning the power on while pressing the MENU key, and reset the drum counter (see User's Manual).

• No Is the LED head being installed properly (check connector CN4 on the Main Control PCB and PC Connector on the LED head)?

  • No Install the LED head properly.

• Yes Replace the LED head or the head cable.

• Has the problem been removed?

• Yes End

  Note: After replacing the LED head, set the printer in the engine maintenance mode by turning the power on while pressing the FORM FEED and ENTER keys. Set the LED head drive time (see 4.2).

• No Replace the Main Control PCB or power supply board.

⑦ Poor fusing

Is paper of the specified grade being used?

- No — Use paper of the specified grade.

Yes — Is the spring of the back-up roller normal?

- No — Replace the spring.

Yes — Is the contact of the fusing unit assy in proper contact with the contact assy (see Fig. 6-4 Ⓖ)?

- No — Adjust the contact of the fusing unit assy to make a proper contact with the contact assembly.

Yes — Replace the fusing unit assy.

Has the problem been removed?

- Yes — End

Note: After replacing the fusing unit assy, set the printer in the engine maintenance mode by turning the power on while pressing the FORM FEED and ENTER keys, and reset the fuser counter (see 4.1).

No — Replace the Main Control PCB or power supply board.

⑥ Print voids

• Is the contact plate of the transfer roller in proper contact with the power supply board (see Fig. 6-5)?

• No — Adjust the contact plate so that it touches the power supply board and the shaft of the transfer roller properly.

• Yes — Replace the transfer roller.

• Has the problem been removed.

• Yes — End

• No — Are the contacts of the toner supply roller, developing roller, image drum and charging roller in proper contact with the contact assy (see Fig. 6-4 Ⓐ, Ⓑ, Ⓒ, Ⓓ, Ⓔ)?

• No — Adjust the contacts so that they touch the contact assy properly.

• Yes — Replace the image drum unit.

• Has the problem been removed?

• Yes — End

Note: After replacing the image drum unit, set the printer in the user maintenance mode by turning the power on while pressing the MENU key, and reset the drum counter (see User's Manual).

• No — Is the LED head being installed properly (check connector CN4 on the Main Control PCB and PC Connector on the LED head)?

• No — Install the LED head properly.

• Yes — Replace the LED head or the head cable.

• Has the problem been removed?

• Yes — End

Note: After replacing the LED head, set the printer in the engine maintenance mode by turning the power on while pressing the FORM FEED and ENTER keys. Set the LED head drive time (see 4.2).

• No — Replace the Main Control PCB or power supply board.

⑦ Poor fusing

Is paper of the specified grade being used?

- No — Use paper of the specified grade.

Yes — Is the spring of the back-up roller normal?

- No — Replace the spring.

Yes — Is the contact of the fusing unit assy in proper contact with the contact assy (see Fig. 6-4 Ⓖ)?

- No — Adjust the contact of the fusing unit assy to make a proper contact with the contact assembly.

Yes — Replace the fusing unit assy.

Has the problem been removed?

- Yes — End

Note: After replacing the fusing unit assy, set the printer in the engine maintenance mode by turning the power on while pressing the FORM FEED and ENTER keys, and reset the fuser counter (see 4.1).

No — Replace the Main Control PCB or power supply board.

⑧ White vertical belts or streaks

- Are the LED lens dirty?
  - • Yes — Clean the LED lens.
- No — Is the contact plate of the transfer roller in proper contact with the power supply board (see Fig. 6-5)?
  - • No — Adjust the contact plate to make a proper contact with the power supply board.
- Yes — Replace the transfer roller.
- Has the problem been removed?
  - • Yes — End
- No — Is the LED head being installed properly (check CN4 connector on the Main Control PCB and PC connector on the LED head)?
  - • No — Install the LED head properly.
- Yes — Replace the LED head.
- Has the problem been removed?
  - • Yes — End

    Note: After replacing the LED head, set the printer in the engine maintenance mode by turning the power on while pressing the FORM FEED and ENTER keys. Set the LED head drive time (see 4.2).
- Yes — Replace the image drum unit.
- Has the problem been removed?
  - • Yes — End

    Note: After replacing the image drum unit, set the printer in the user maintenance mode by turning the power on while pressing the MENU key. Reset the drum counter (see User's Manual).
- No — Replace the Main Control PCB or power supply board.

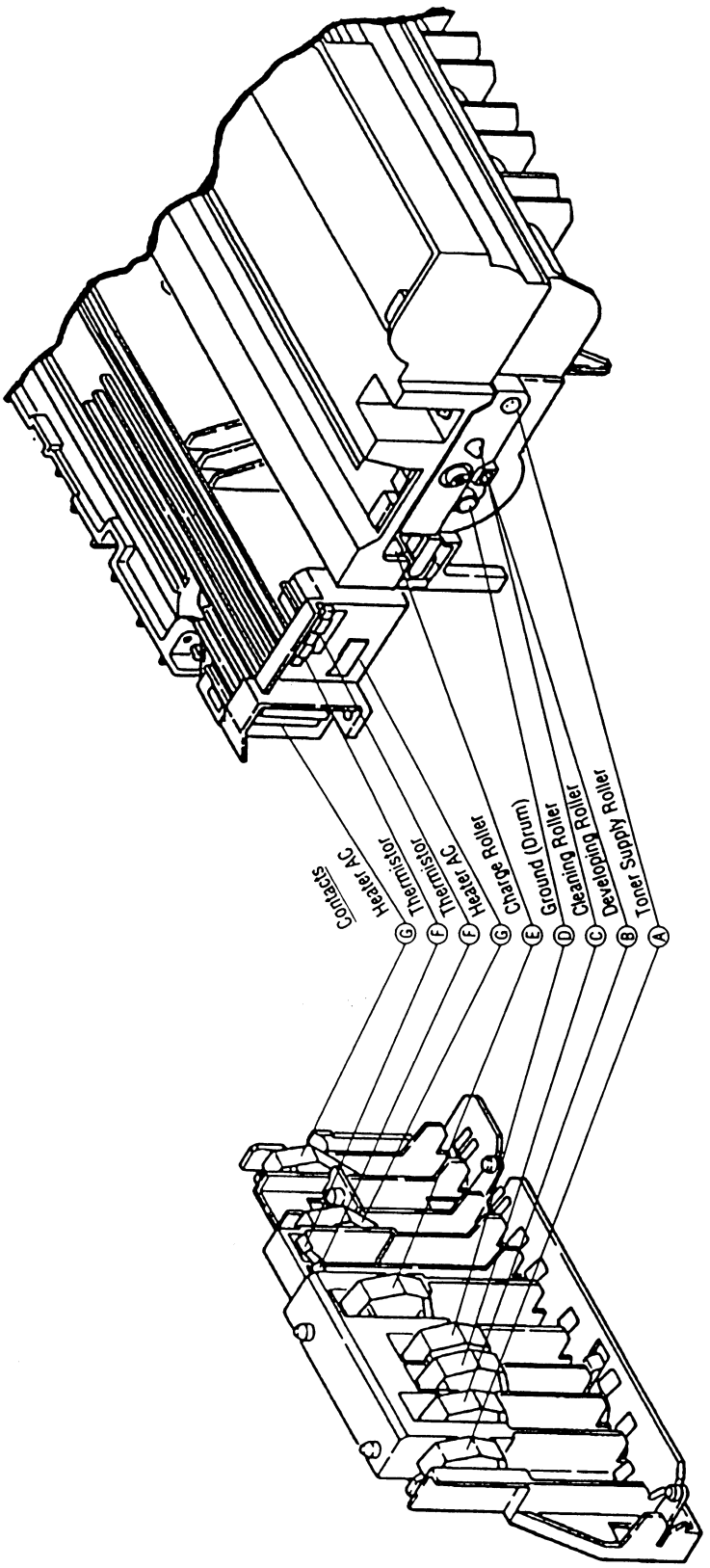
Contacts
Heater AC
Ⓖ
Thermistor
Ⓕ
Thermistor
Ⓕ
Heater AC
Ⓖ
Charge Roller
Ⓔ
Ground (Drum)
Ⓓ
Cleaning Roller
Ⓒ
Developing Roller
Ⓑ
Toner Supply Roller
Ⓐ

Figure 6-4

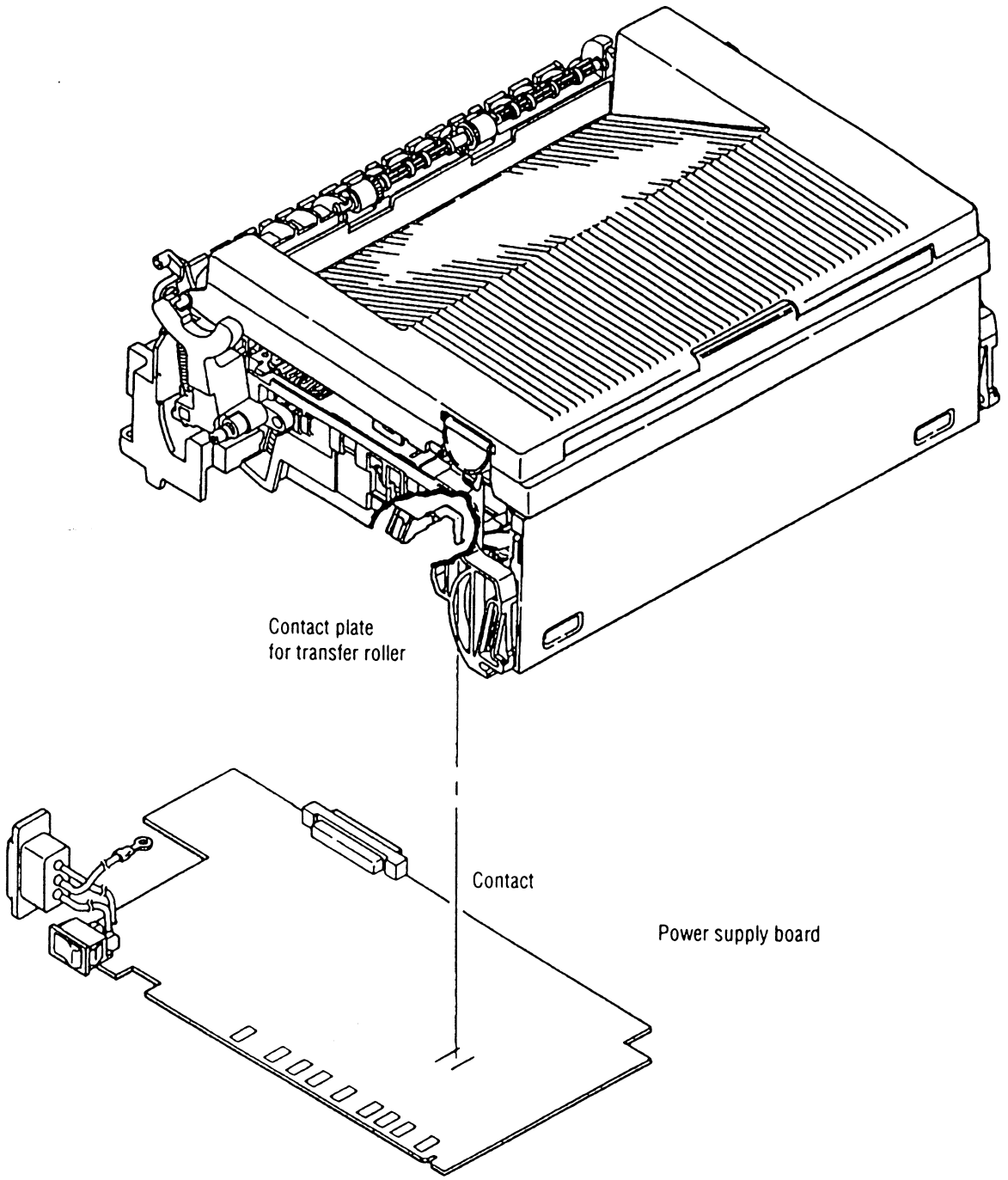
Contact plate
for transfer roller
Contact
Power supply board

Figure 6-5

7. WIRING DIAGRAM

7. WIRING DIAGRAM

7.1 Interconnect Signal Diagram

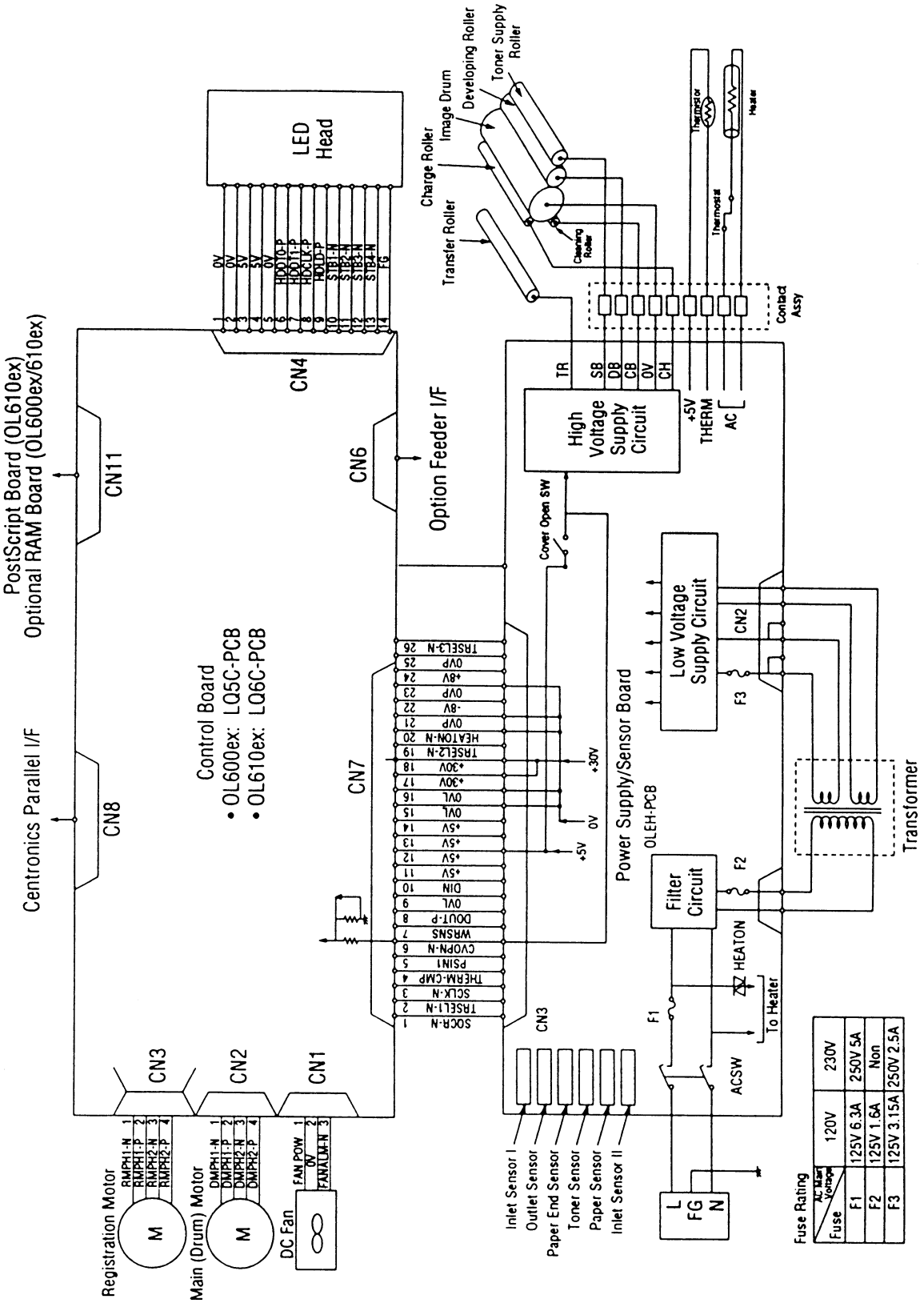

Fuse \ AC Input Voltage	120V	230V
F1	125V 6.3A	250V 5A
F2	125V 1.6A	Non
F3	125V 3.15A	250V 2.5A

7.2 PCB Layout and Connector Signal List

(1) Control Board
- OL600ex: LQ5C-PCB
- OL610ex: LQ6C-PCB

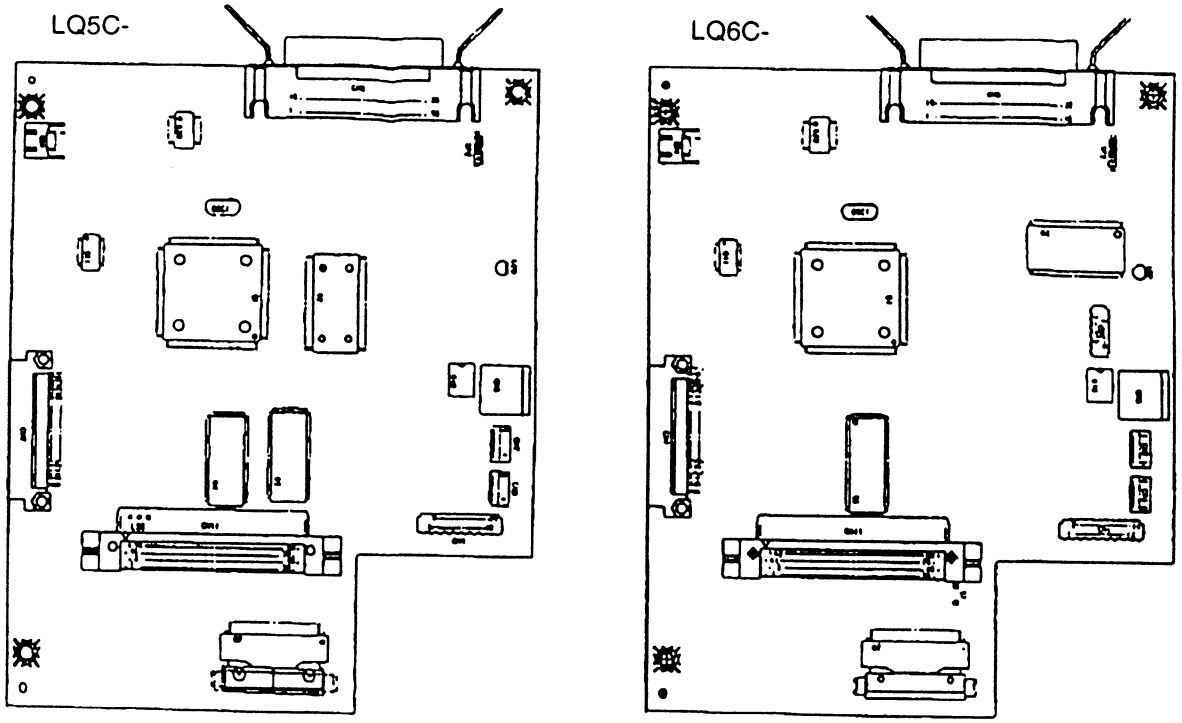

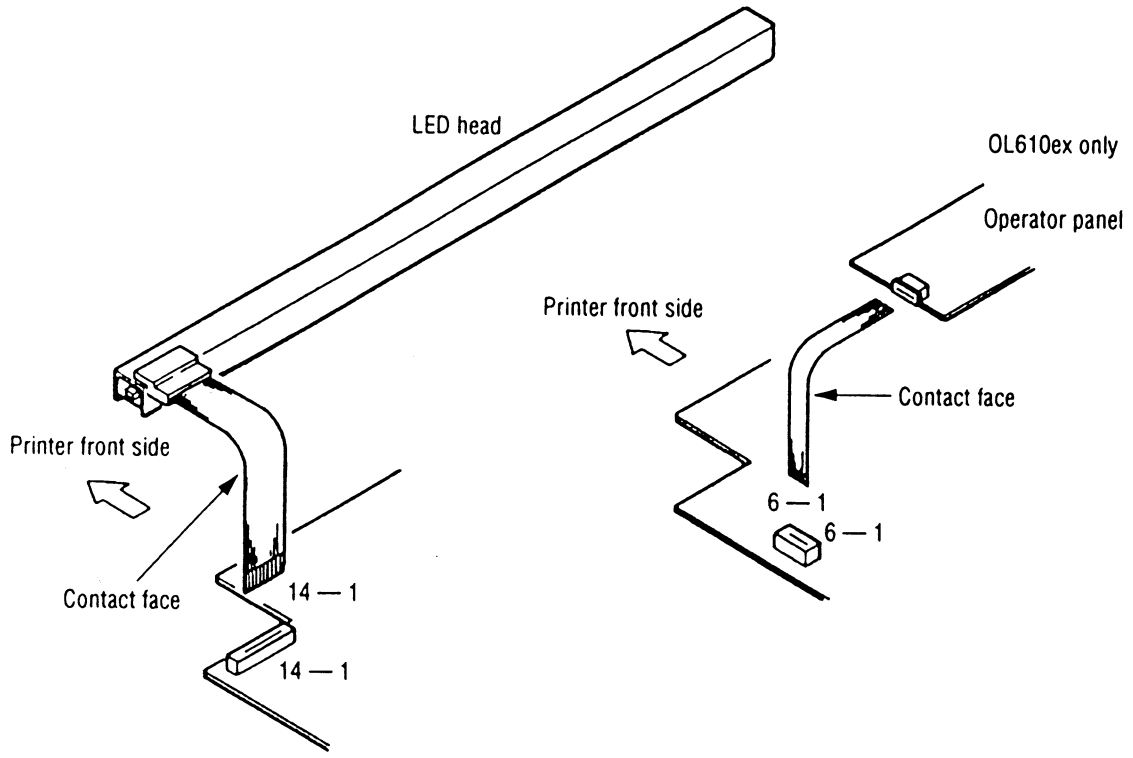

(2) Power Supply Board

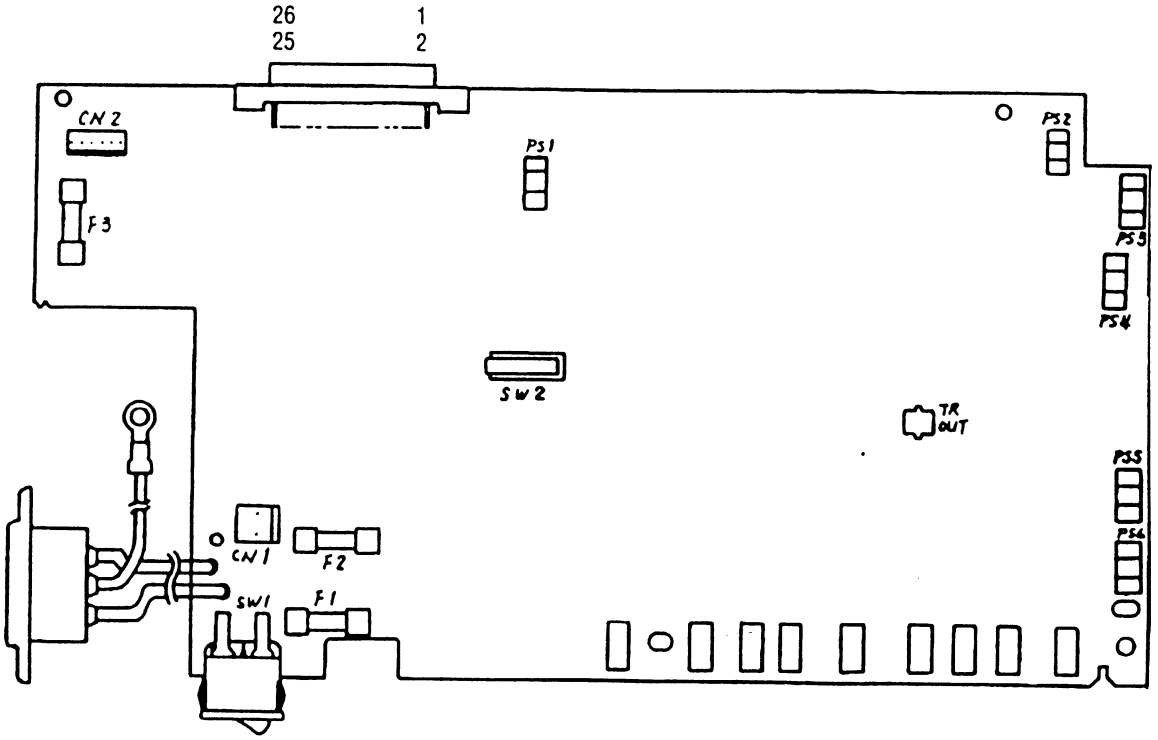

(3) PS Board (LQ8A-) (option)

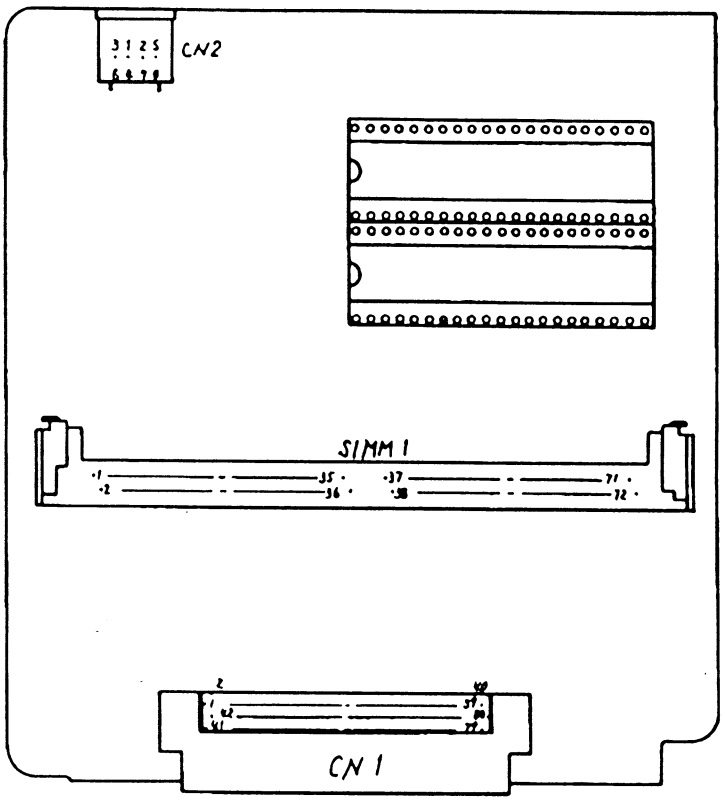

- CN1 Pin Assignment
  To Fan motor

Opening

1
2
3

PIN NO.	I/O	Signal	Description
1	O	FANPOW	Power supply for fan driving
2	C	OV	Ground
3	I	FANALM-N	Fan alarm

- CN2 Pin Assignment
  To Drum motor

1
2
3
4

PIN NO.	I/O	Signal	Description
1	O	DMPH1-N	Coil 1-N
2	O	DMPH1-P	Coil 1-P
3	O	DMPH2-N	Coil 2-N
4	O	DMPH2-P	Coil 2-P

Excitation sequence

PIN NO.	Line Color	Step No.			
		1	2	3	4
2	Yellow	+	-	-	+
4	Black	+	+	-	-
1	Orange	-	+	+	-
3	Brown	-	-	+	+

Turning direction Clockwise when viewed from the output axis.

- CN3 Pin Assignment
  To Resist motor

	PIN NO.	I/O	Signal	Description
1	1	O	RMPH1-N	Coil 1-N
2	2	O	RMPH1-P	Coil 1-P
3	3	O	RMPH2-N	Coil 2-N
4	4	O	RMPH2-P	Coil 2-P

Excitation sequence

PIN NO.	Line Color	Step No.			
		1	2	3	4
2	Yellow	+	-	-	+
4	Black	+	+	-	-
1	Orange	-	+	+	-
3	Brown	-	-	+	+

Turning direction Clockwise as viewed from the output axis.

- CN4 Pin Assignment
  To LED head

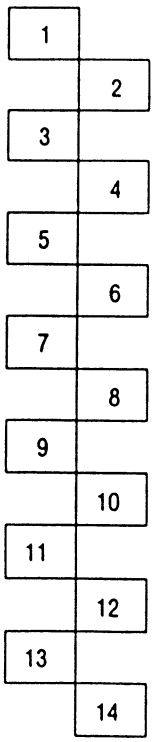

PIN NO.	I/O	Signal	Description
1	C	0V	Grount for LED
2	C	0V	Ground for LED
3	O	5V	+5V power supply for LED diriving
4	O	5V	+5V power supply for LED driving
5	C	0V	Logic ground
6	O	HDDT0-P	Data
7	O	HDDT1-P	Data
8	O	HDCLK-P	Clock
9	C	HDLD-P	Load
10	O	STB1-N	Strobe1
11	O	STB2-N	Strobe 2
12	O	STB3-N	Strobe 3
13	O	STB-4	Strobe 4
14	C	FG	FG

- CN5 Pin Assignment
  To Operator panel (OL610ex only)

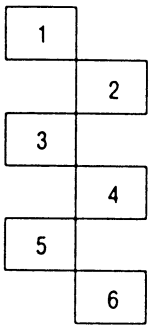

PIN NO.	I/O	Signal	Description
1	O	OPLD-N	Load
2	C	0V	Logic groud
3	O	OPDTOUT-P	Data output
4	I	OPDTIN-P	Data input
5	C	5V	+5V power supply
6	O	OPCLK-N	Clock

- POWER Pin Assignment
  (To power supply/sensor board)

2	1
4	3
6	5
8	7
10	9
12	11
14	13
16	15
18	17
20	19
22	21
24	23
26	25

Pin No.	Signal	I/O	Description	Pin No.	Signal	I/O*	Description
2	TRSEL1	O	TR control switch	1	SQCR-N	I	Sequence clear signal of serial I/F
4	THERM-CMP	I	Heater temperature	3	SCLK-N	I	Clock signal of serial I/F
6	CVOPN-N	I	Cover open (+30V)	5	PSIN1	I	Paper sense
8	DOUT-P	O	Serial data output	7	WRSNS	I	Reading of paper edge
10	DIN	I	Serial data input	9	OVL	C	Ground for logic
12	+5V	I	Logic circuit supply voltage	11	+5V	I	Logic circuit supplysoltage
14	+5V	I	Logic circuit supply voltage	13	+5V	I	Logic circuit supply soltage
16	OVL	C	Logic ground	15	OVL	C	Logic ground
18	+30V	I	Motor and fan drive voltage and source voltage for high voltage supply	17	+30V	I	Motor and fan drive voltage and source voltage for high voltage supply
20	HEATON-N	O	Heater on	19	TRSEL2	O	TR control switch
22	-8V	I	RS232C line voltage and PS board supply voltage	21	OVP	C	Power ground
24	+8V	I	RS232C line voltage	23	OVP	C	Power ground
26	TRSEL3	O	TR control switch	25	OVP	C	Power ground

* O: Out
  I: In
  C: Common

- CN8 Pin Assignment
  Centro Parallel

1	19
2	20
3	21
4	22
5	23
6	24
7	25
8	26
9	27
10	28
11	29
12	30
13	31
14	32
15	33
16	34
17	35
18	36

Pin No.	I/O*	Signal	Description	Pin No.	I/O	Signal	Description
1	I	STROBE-N	Strobe	19	C	SG	Ground
2	C	DATA1-P	Data bit 0	20	C	SG	Ground
3	C	DATA2-P	Data bit 1	21	C	SG	Ground
4	C	DATA3-P	Data bit 2	22	C	SG	Ground
5	C	DATA4-P	Data bit 3	23	C	SG	Ground
6	C	DATA5-P	Data bit 4	24	C	SG	Ground
7	C	DATA6-P	Data bit 5	25	C	SG	Ground
8	C	DATA7-P	Data bit 6	26	C	SG	Ground
9	C	DATA8-P	Data bit 7	27	C	SG	Ground
10	O	ACK-N	Acknowledge	28	C	SG	Ground
11	O	BUSY-P	Busy	29	C	SG	Ground
12	O	PE-P	paper end	30	C	SG	Ground
13	O	SEL-P	Select	31	I	IPRIME-N	Input prime
14	I	AUTOFEED-N	Auto feed	32	O	FAULT-N	Fault
15		NC		33	C	SG	Ground
16	C	SG	Ground	34		NC	
17	C	FG		35	O	HILEVEL	Always kept high
18	O	P-LOGIC-H	+5V power supply	36	I	SELIN-N	Select in

- CN11 Pin Assignment
  To Option board and PS board

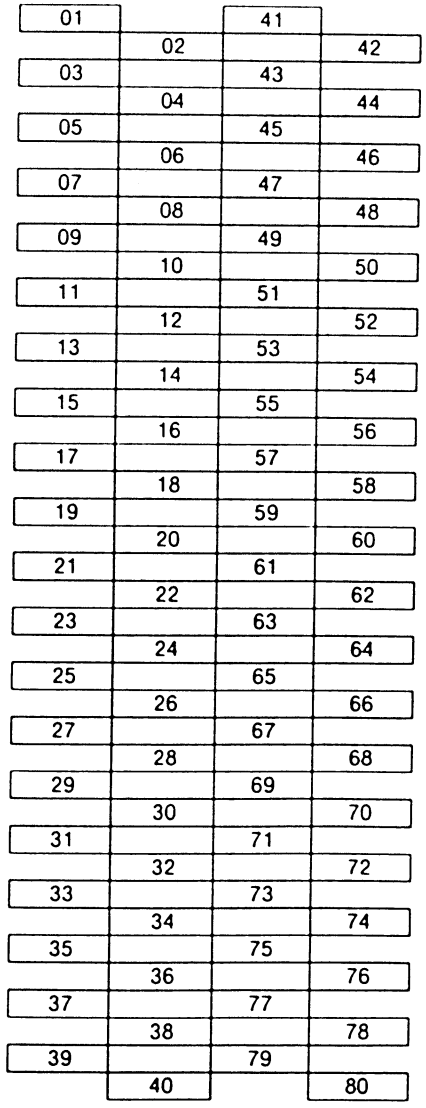

Pin No.	I/O	Signal	Description	Pin No.	I/O	Signal	Description
01	O	-8V	-8V power supply	41	C	0V	Logic ground
02	C	0V	Logic ground	42	C	0V	Logic ground
03	C	0V	Logic ground	43	C	SSTXD-P	EEPROM data
04		NC		44	O	EEPRMCLK-P	EEPROM clock
05		NC		45	O	EEPRMCS1-P	EEPROM select
06	C	0V	Logic ground	46	O	+5V	+5V power supply
07	C	0V	Logic ground	47	I	INT2-N	Interrupt request 2
08	I	INT1-N	Interrupt request 1	48	O	IOS1-N	I/O select 1
09	O	IOS0-N	I/O select 0	49	O	CS3-N	ROM select 3
10	O	CS2-N	ROM select 2	50		NC	
11	O	CS4-N	ROM select 4	51	O	DDRAS1-N	OL610e only, OL600e: NC
12		NC		52	O	RESET-N	Reset signal
13	I	SCSREO-P	SCC receive request	53		NC	
14	I	SCRREO-P	SCC send request	54	O	A22-P	Address bit 22
15	O	A08-P	Address bit 8	55	O	A07-P	Address bit 7
16	O	A06-P	Address bit 6	56	O	A01-P	Address bit 5
17	O	A04-P	Address bit 4	57	O	A03-P	Address bit 3
18	O	A02-P	Address bit 2	58	O	A05-P	Address bit 1
19	O	A00-P/ORE-N	OR write enable	59	O	A21-P	Address bit 21
20	O	A20-P	Address bit 20	60	O	A19-P	Address bit 19
21	O	A17-P	Address bit 17	61	O	DCAS0-N	DCAS0
22	O	DCAS1-N	DCAS1	62	O	RD-N	RD-N
23	O	A18-P	Address bit 18	63	O	A16-P	Address bit 16
24	O	A15-P	Address bit 15	64	O	A14-P	Address bit 14
25	O	A13-P	Address bit 13	65	C	0V	Logic ground
26	O	+5V	+5V power supply	66	O	A12-P	Address bit 12
27	O	A11-P	Address bit 11	67	O	A10-P	Address bit 10
28	O	A09-P	Address bit 9	68	O	WR-N	WR-N
29	O	DRAS2-N	DRAM select 2	69	O	DRAS3-N	DRAM select 3
30	C	DRAN4-N	DRAM select 4	70	O	DRAS5-N	DRAM select 5
31	C	D07-P	Data bit 7	71	C	D06-P	Data bit 6
32	C	D05-P	D05-P Data bit 5	72	C	D04-P	Data bit 4
33	C	D02-P	D02-P Data bit 2	73	C	D03-P	Data bit 3
34	C	D00-P	D00-P Data bit 0	74	C	D01-P	Data bit 1
35	C	0V	Logic ground	75	O	+5V	+5V power supply
36	C	D14-P	Data bit 14	76	C	D15-P	Data bit 15
37	C	D12-P	Data bit 12	77	C	D13-P	Data bit 13
38	C	D11-P	Data bit 11	78	C	D10-P	Data bit 10
39	C	D09-P	Data bit 9	79	C	D08-P	Data bit 8
40		NC		80	C	0V	Logic ground

PS Board (OL610ex)

- CN1 Pin Assignment

To LocalTalk (RS422)

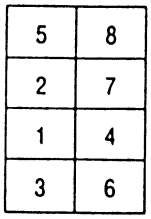

PIN NO.	I/O	Signal	Description
1	NC	NC	
2	I	SYNC	Not used
3	O	TXD-	Transmit data -
4	C	SG	Signal ground
5	I	RXD-	Receive data -
6	O	TXD+	Transmit data +
7	NC	NC	
8	I	RXD+	Receive data +

PS Board (OL610ex)

- CN2 Pin Assignment

To Main Control PCB

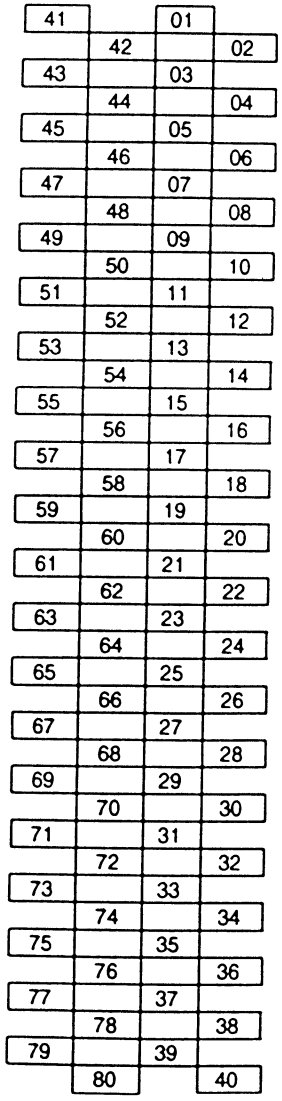

Pin No.	I/O	Signal	Description	Pin No.	I/O	Signal	Description
01	I	-8V	-8V power input	41	C	0V	Logic ground
02	C	0VP	Analog ground	42	C	0V	Logic Ground
03	C	0V	Logic ground	43	I	SSTXD-P	EEPROM data
04		NC		44	I	EEPRMCLK-P	EEPROM clock
05		NC		45	I	EEPRMCS1-P	EEPROM 1 select
06	C	0V	Logic ground	46	I	+5V	+5V power input
07	C	0V	Logic Ground	47	O	INT2-N	Interrupt request 2
08	O	INT1-N	Interrupt request 1	48	I	IOS1-N	I/O select 1
09	I	IOS0-N	I/O select 0	49	I	CS3-N	ROM/SRAM select 3
10	I	CS2-N	ROM/SRAM select 2	50		NC	
11		NC		51		NC	
12	O	DRDY-N	Data read	52	I	CLRST-N	Cold reset
13	O	SCSREQ-P	SCC receive request	53		NC	
14	O	SCRREQ-P	SCC send request	54		NC	
15	I	A08-P	Address bit 8	55	I	A07-P	Address bit 7
16	I	A06-P	Address bit 6	56	I	A05-P	Address bit 5
17	I	A04-P	Address bit 4	57	I	A03-P	Address bit 3
18	I	A02-P	Address bit 2	58	I	A01-P	Address bit 1
19	I	A00-P/ORE-N	Address bit 0	59	I	A21-P	Address bit 21
20	I	A20-P	Address bit 20	60	I	A19-P	Address bit 19
21	I	A17-P	Address bit 17	61	I	DCAS0-N	DCAS0
22	I	DCAS1-N	DCAS1	62	I	RD-N	RD-N
23	I	A18-P	Address bit 18	63	I	A16-P	Address bit 16
24	I	A15-P	Address bit 15	64	I	A14-P	Address bit 14
25	I	A13-P	Address bit 13	65	C	0V	
26	I	+5V	+5V power input	66	I	A12-P	Address bit 12
27	I	A11-P	Address bit 11	67	I	A10-P	Address bit 10
28	I	A09-P	Address bit 9	68	I	WR-N	WR-N
29	I	DRAS2-N	DRAM select 2	69	I	DRAS3-N	DRAM select 3
30	I	DRAN4-N	DRAM select 4	70	I	DRAS5-N	DRAM select 5
31	C	D07-P	Data bit 7	71	C	D06-P	Data bit 6
32	C	D05-P	Data bit 5	72	C	D04-P	Data bit 4
33	C	D02-P	Data bit 2	73	C	D03-P	Data bit 3
34	C	D00-P	Data bit 0	74	C	D01-P	Data bit 1
35	C	0V	Logic ground	75	I	+5V	+5V power input
36	C	D14-P	Data bit 14	76	C	D15-P	Data bit 15
37	C	D12-P	Data bit 12	77	C	D13-P	Data bit 13
38	C	D11-P	Data bit 11	78	C	D10-P	Data bit 10
39	C	D09-P	Data bit 9	79	C	D08-P	Data bit 8
40		NC		80		NC	

Unit	Circuit Diagram	Illustration	Resistance
Registration motor	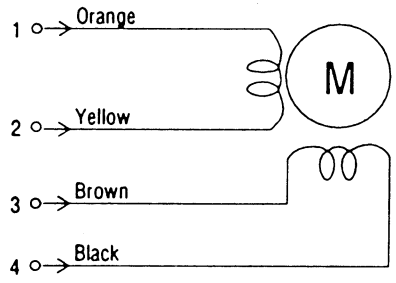	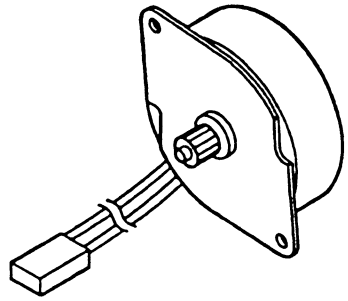	Between pins 1 and 2: 18.6Ω Between pins 3 and 4: 18.6Ω
Main (drum) motor	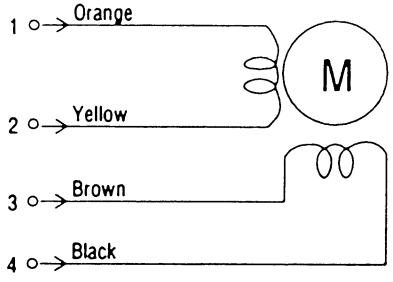	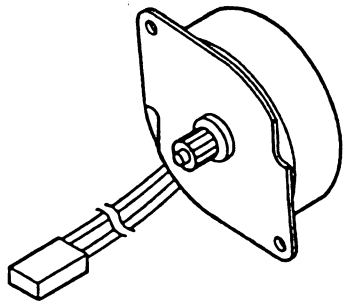	Between pins 1 and 2: 12.6Ω Between pins 3 and 4: 12.6Ω
Fusing Unit	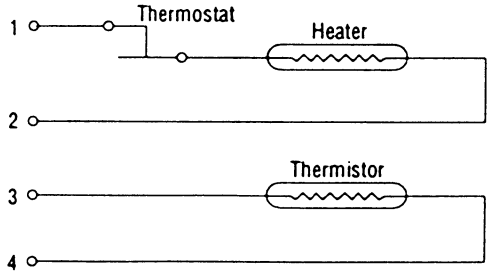	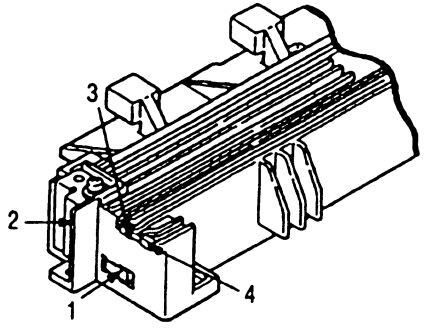	Between pins 1 and 2: 120V 3Ω 240V 10Ω Between pins 3 and 4: 220KΩ (at room temperature)

Unit	Circuit Diagram	Illustration	Resistance
Transformer	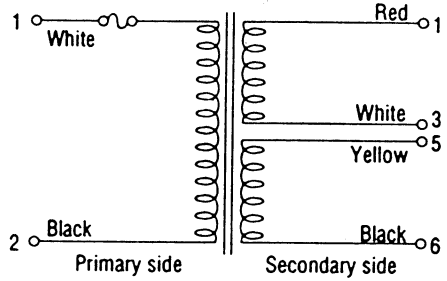	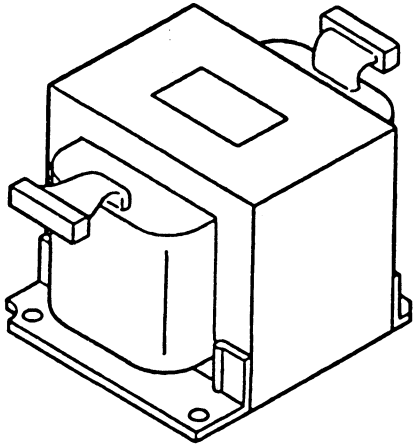	Primary side Between pins 1 and 2: 56.8Ω (OEL) 14.8Ω (ODA) Secondary side Between pins 1 and 3: 1.3Ω Between pins 5 and 6: 1.2Ω
Fan	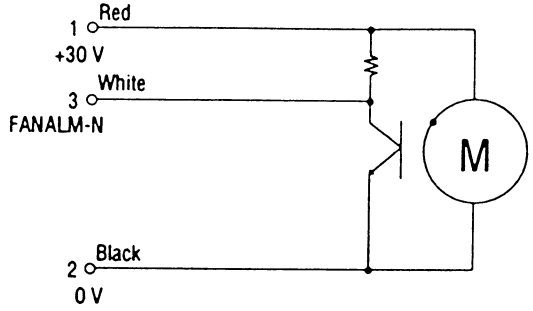	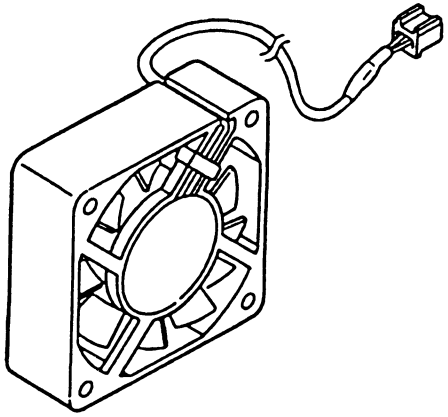	

7.4 Short Plug Setting

(1) Main Control Board
- OL600ex: LQ5C-PCB
- OL610ex: LQ6C-PCB

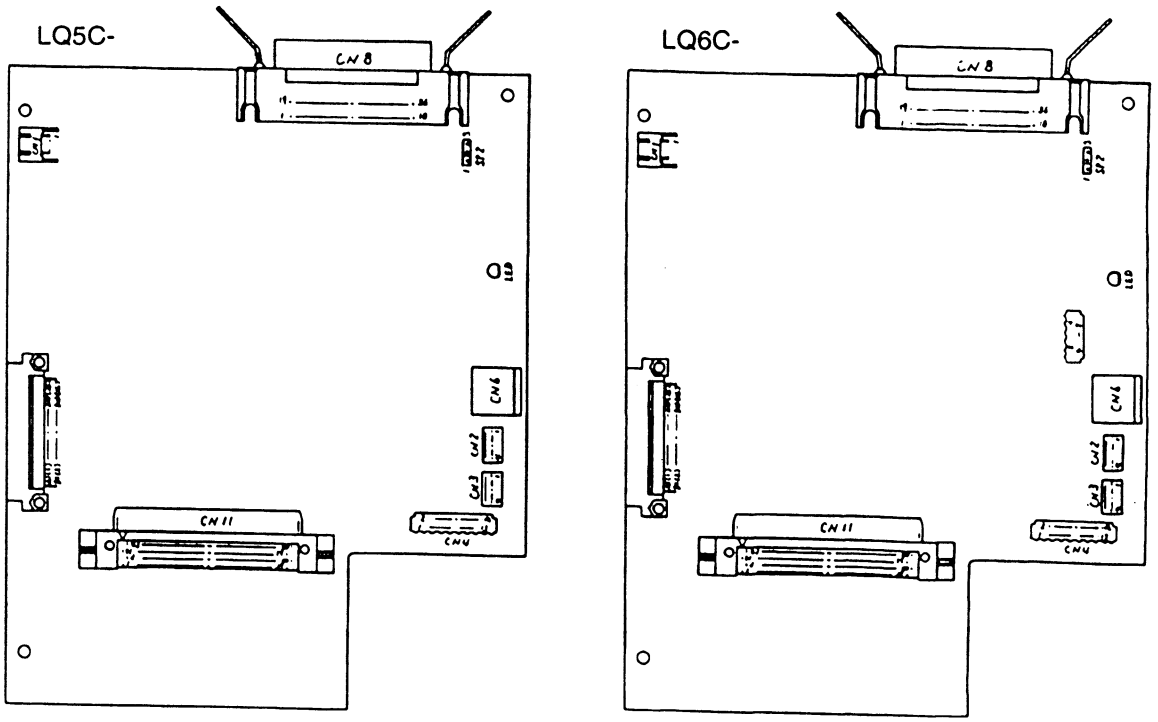

- Short plug settings

Short plug	Plug setting	Description	Factory setting
SP2	3	+5 V is supplied to pin 18 of Centronics parallel I/F connector.	A-side
	1	High level is supplied to pin 18 Centronics parallel I/F connector.	

(2) Option RAM Board (LQME-PCB)

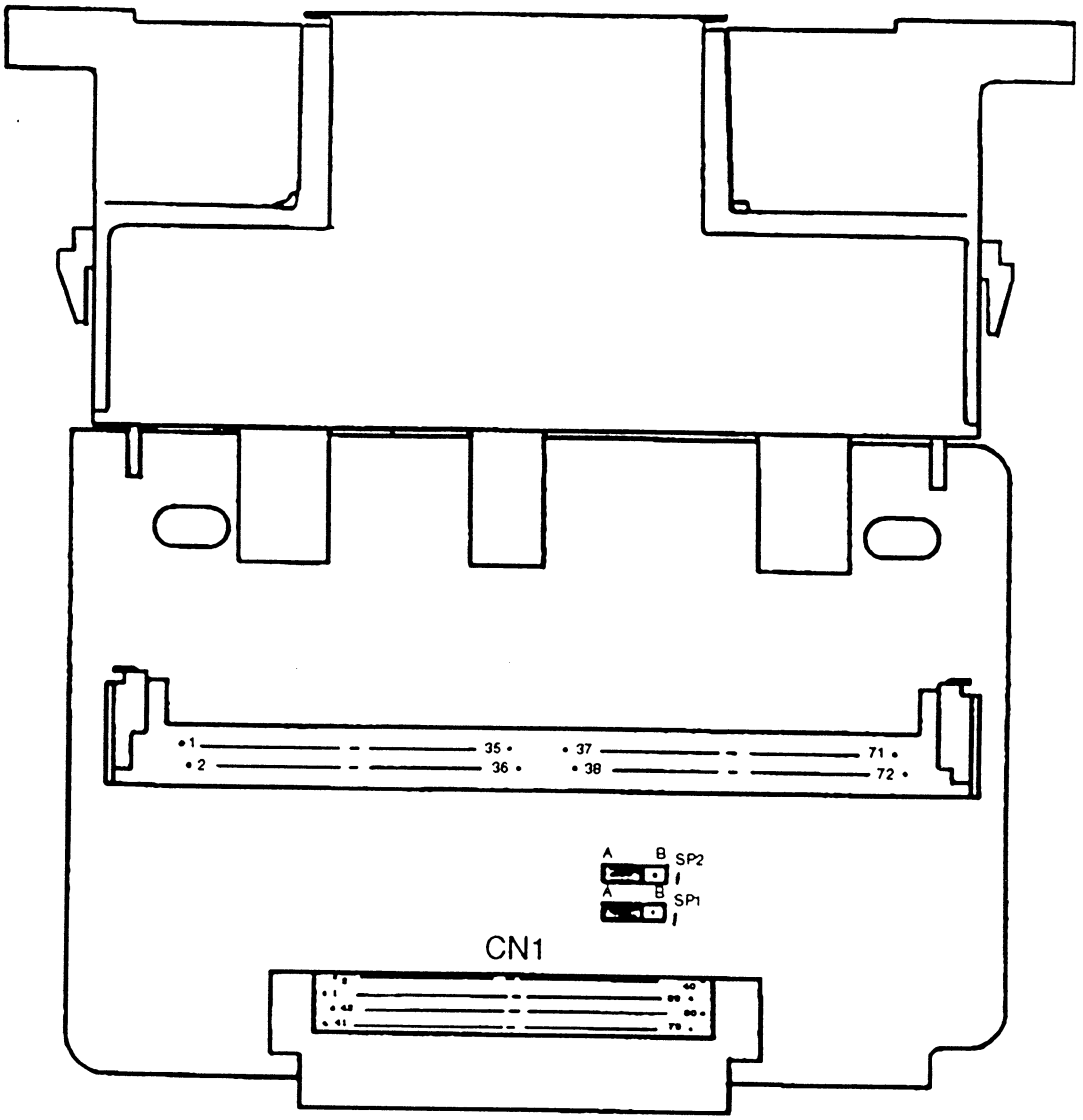

- SIMM specification
  Usable RAM capacity: 1/2/4/8/16 Mbytes (Access time 60 ~ 100 ns)

- Short Plug Setting

Printer	SP1	SP2	Remarks
OL600ex	Side B	Side B	See remark for SIMM capacity limitation.
OL610ex	Side A	Side A	

- Relation between the capacity of added SIMM and total effective RAM capacity is shown in table below.

OL600ex

SIMM Capacity	Total Capacity
Nil.	2 Mbytes
1 Mbyte	3 Mbytes
2 Mbytes	3.5 Mbytes
4 Mbytes	6 Mbytes
8 Mbytes	8 Mbytes
16 Mbytes	18 Mbytes

OL610ex

SIMM Capacity	Total Capacity
Nil.	3 Mbytes
1 Mbyte	4 Mbytes
2 Mbytes	5 Mbytes
4 Mbytes	7 Mbytes
8 Mbytes	11 Mbytes
16 Mbytes	19 Mbytes

Remark: With OL600ex, only 3/4 of 2 Mbytes or 8 Mbytes SIMM capacity is actually effective: 1.5 Mbytes and 6 Mbytes respectively.

8. PARTS LIST

8. PARTS LIST

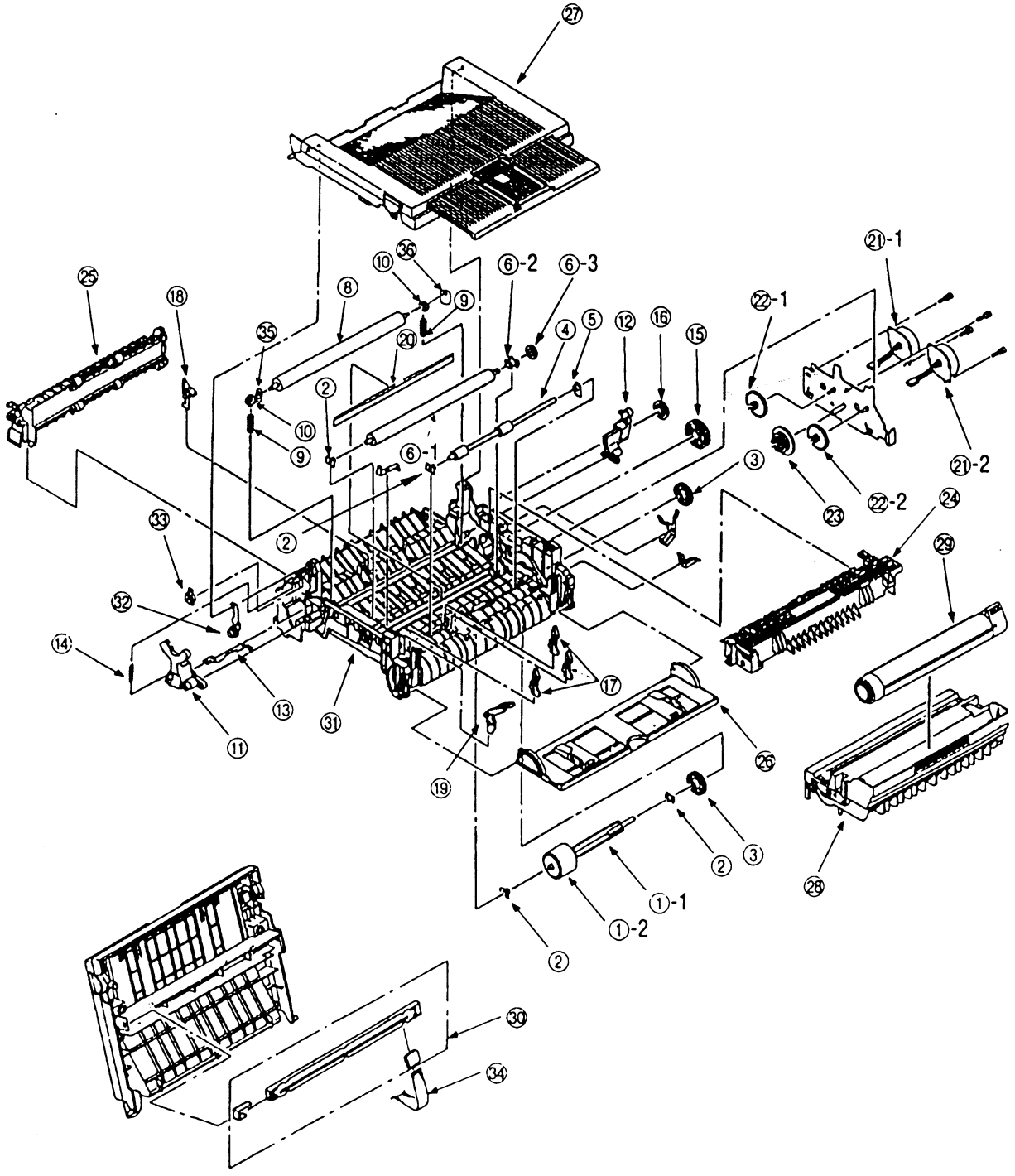

Figure 8-1 Lower Base Unit

Table 8-1 Lower Base Unit

No.	Name/Rating	Part No.	USE		Remarks
			OL600ex	OL610ex	
1-1	Hopping roller shaft	3PP4083-6020P1	1	1	
1-2	Hopping roller rubber F	4PB4122-1280P1	1	1	
2	Bearing	4PP4083-6022P2	4	4	
3	Hopping roller cloutch gear	4PB4083-6024P1	2	2	
4	Registration roller	3PB4083-6030P1	1	1	
5	Bearing (Registration)	4PP4083-6031P1	1	1	
6-1	Transfer roller A	3YB4083-7640P3	1	1	
6-2	Bearing C	3PP4083-6289P1	1	1	
6-3	TR Gear A	3PP4083-6290P1	1	1	
8	Back-up roller	3PB4083-6064P2	1	1	
9	Bias spring B	4PP4083-7620P1	2	2	
10	Back-up roller bushing	4PP4083-6052P1	2	2	
11	Reset lever L	3PP4083-6053P1	1	1	
12	Reset lever R	3PP4083-6054P1	1	1	
13	Cover open arm	3PP4083-6058P1	1	1	
14	Stacker cover reset spring	4PP4083-6057P1	1	1	
15	Fuser roller idle gear	4PP4083-6080P1	1	1	
16	Eject roller idle gear	4PP4083-6081P1	1	1	
17	Sensor plate (Inlet, paper)	4PP4083-6083P1	3	3	
18	Sensor plate (Outlet)	4PA4083-6025G1	1	1	
19	Toner sensor (Adhesion)	4PP4083-6086G1	1	1	
20	Diselectrification bar	4PB4083-3182P3	1	1	
21-1	Pulse motor A	4PB4076-6150P1	1	1	
21-2	Pulse motor B	4PB4076-6151P1	1	1	
22-1	Idle gear D	3PP4076-6145P1	1	1	
22-2	Idle gear E	3PP4076-6146P1	1	1	
23	Reduction gear C	3PP4076-6147P1	1	1	
24	Fusing unit	2YX4083-6100G5	1	1	120V
	Fusing unit	2YX4083-6100G6	1	1	230V
25	Eject roller assy	2PA4083-6120G2	1	1	
26	Manual feed guide assy	2PA4083-6130G1	1	1	
27	Face down stacker cover assy	2PA4083-6160G4	1	1	
28	Image drum kit	4YA4083-7300G2	1	1	ODA (Consumable)
	Image drum kit	4YA4083-7300G3	1	1	OEL/INT (Consumable)
29	Toner cartridge kit	4YA4083-6400G2	1	1	ODA (Consumable)
	Toner cartridge kit	4YA4083-6400G3	1	1	OEL/INT (Consumable)
30	LED head assy	3YX4083-6245G3	1	1	
31	Lower base	2PP4083-6801G2	1	1	
32	Stacker cover damper arm	4PP4083-6191G1	1	1	
33	Stacker cover damper gear	4PB4083-6197P1	1	1	
34	Flexible cable (LED head)	4YX4121-1025G2	1	1	
35	Washer B	4PP4120-1209P1	1	1	
36	Washer C	4PP4120-1210P1	1	1	

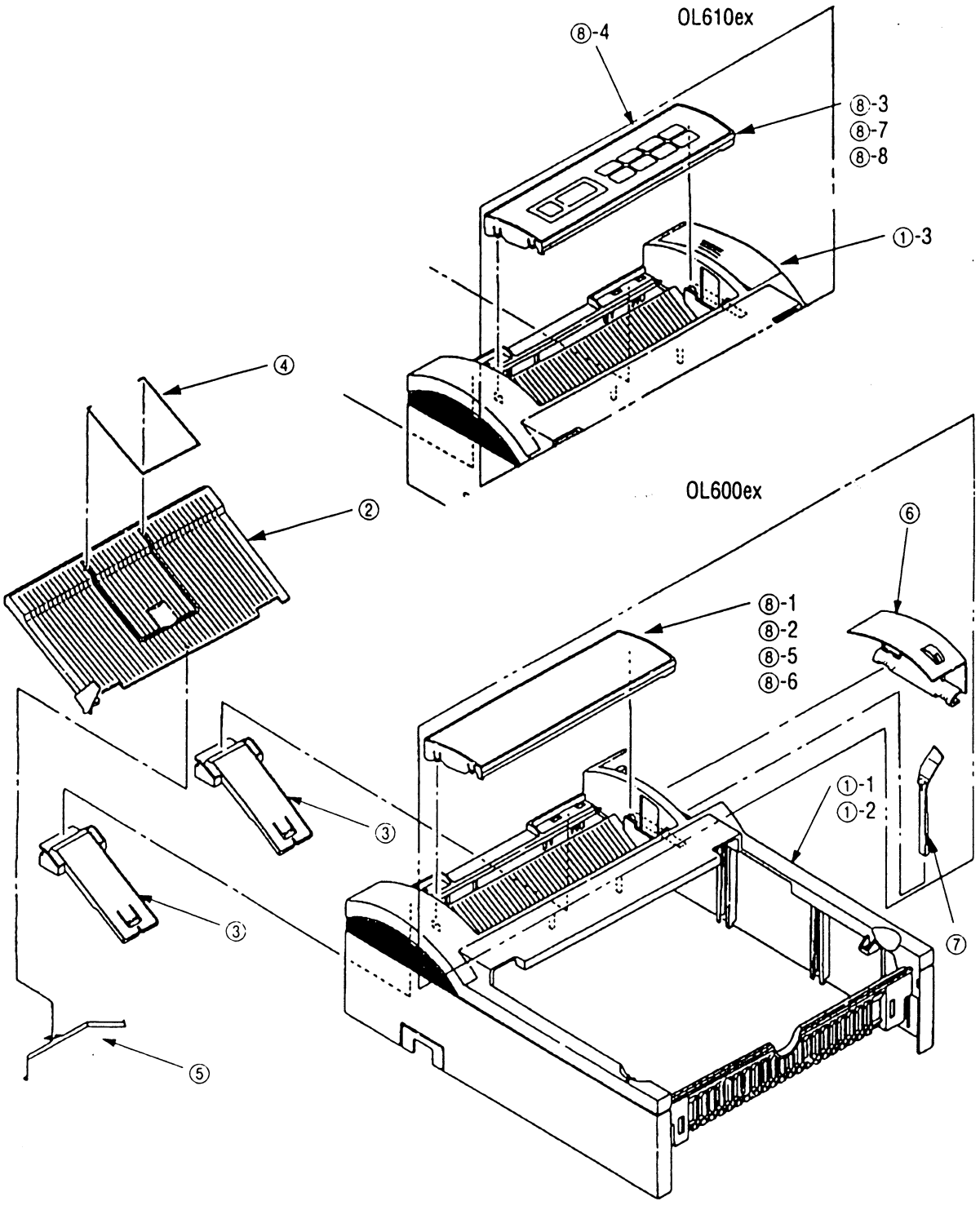

Figure 8-2 Upper Cover Unit

Table 8-2 Upper Cover Unit

No.	Name/Rating	Part No.	USE		Remarks
			OL600ex	OL610ex	
1-1	Upper cover	2PP4083-6808G1	1	1	ODA
	Upper cover	2PP4083-6808G1	1	—	OEL/INT
1-2	Upper cover	2PP4083-6808G2	—	1	OEL/INT
1-3	Upper cover assy	2PA4094-7812G5	—	—	ODA
2	Stacker	1PP4094-7814P1	1	1	
3	Stacker clamp	3PP4094-7816P1	2	2	
4	Guide wire	4PB3517-1567P1	1	1	
5	Leaf spring	3PP3517-1601P1	1	1	
6	Lens cover	2PP4128-1171P1	1	—	
7	Lens frame	3PP4128-1172P1	1	—	
8-1	Logo frame	1PP4128-1246P1	1	—	ODA
8-2	Logo frame	1PP4128-1246P2	—	1	ODA
8-3	Operator panel assy	2YX4083-6170G31	—	—	ODA
8-4	Operator panel sheet	3PB4128-1273P1	—	—	ODA
8-5	Logo frame	1PP4128-1246P3	1	—	OEL
8-6	Logo frame	1PP4128-1246P6	1	—	OKI-INT
8-7	Operator panel assy	2YX4083-6170G32	—	1	OEL
8-8	Operator panel assy	2YX4083-6170G33	—	1	OKI-INT

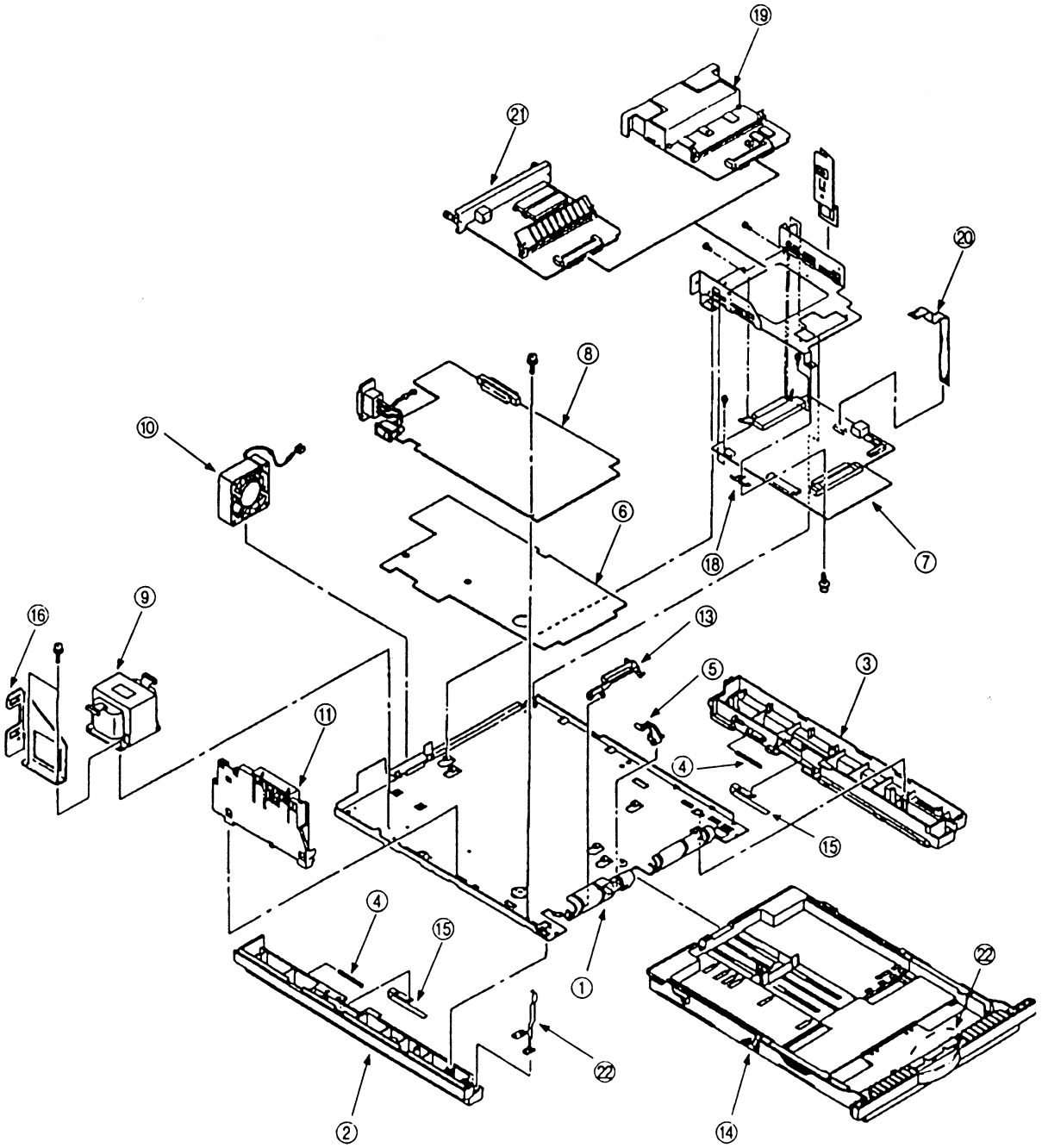

Figure 8-3 Base Unit

Table 8-3 Base Unit

No.	Name/Rating	Part No.	USE		Remarks
			OL600ex	OL610ex	
1	Base plate	2PP4083-6809G1	1	1	
2	Cassette guide L	3PP4083-6802G1	1	1	
3	Cassette guide R	3PP4083-6803G1	1	1	
4	Cassette eject spring	4PP4083-6152P1	2	2	
4	Sensor plate (paper end)	4PP4083-6082P1	1	1	
6	Insulator	3PB4083-6144P1	1	1	
7	Control board (LQ5C)	4YA4046-1670G11	1	—	ODA
		4YA4046-1670G12	1	—	OKI-INT
		4YA4046-1670G9	1	—	OEL only
	Control board (LQ6C)	4YA4046-1671G11	—	1	ODA
		4YA4046-1671G12	—	1	OEL/OKI-INT
8	Power supply board	4YA4049-7101G01	1	1	120V
	Power supply board	4YA4049-7101G02	1	1	230V
9	Transformer	4YB4049-7032P3	1	1	120V
	Transformer	4YB4049-7033P3	1	1	230V
10	Fan motor	4PB4076-6152P1	1	1	
11	Contact assy	3PA4083-6090G1	1	1	
13	Cassette sensor plate	3PP4083-6154P1	1	1	
14	Paper cassette	4YA4083-6260G2	1	1	ODA (Option)
	Paper cassette	4YA4083-6260G3	1	1	OEL/INT (Option)
15	Support spring	4PP4083-6153P1	2	2	
16	Inlet holder	4PP4083-6145P1	1	1	
18	Ground plate	4PP4083-6137P1	1	1	
19	LQME-PCB (RAM board)	4YA4121-1058G11	1	1	Option
20	Sumi card assy (Ope. panel)	4YX4121-1035G2	—	—	ODA
	Sumi card assy (Ope. panel)	4YX4121-1035G2	—	1	OEL/INT
21	LQ8A PCB (PS control)	4YA4046-1672G11	—	1	OEL/INT (Option)
22	Separator assy (paper cassette)	3PP4083-5663G1	1	1	

Appendix A CENTRONICS PARALLEL INTERFACE

1) Connector

- Printer side : 36-pin receptacle
  (single port) Type 57-40360-12-D56 (made by Daiichi Denshi) or equivalent
- Cable side : 36-pin plug
  Type 57-30360 (made by Daiichi Denshi) or equivalent
  Plug-552274-1 (AMP), 552073-1 (AMP) or equivalent

2) Cable

- Cable length : 6 ft (1.8 m) max.

(A Shielded cable composed of twisted pair wires is recommended for noise prevention.)

Note: Cable is not supplied.

3) Table of Parallel I/F Signals

Pin No.	Signal name	Signal direction	Functions
1	$\overline{\text{DATA STROBE}}$	→ PR	Parallel data sampling strobe
2	DATA BIT - 1		
3	DATA BIT - 2		
4	DATA BIT - 3		
5	DATA BIT - 4	→ PR	PR Parallel input data
6	DATA BIT - 5		
7	DATA BIT - 6		
8	DATA BIT - 7		
9	DATA BIT - 8		
10	$\overline{\text{ACKNOWLEDGE}}$	← PR	Completion of data input or end of functioning
11	BUSY	← PR	During print processing or during alarm
12	PAPER END	← PR	End of paper
13	SELECT	← PR	Select state (ON-LINE)
14	$\overline{\text{AUTOFEED}}$	→ PR	Auto feed
15	-		(Not used)
16	0V		Signal ground
17	CHASSIS GROUND		Chassis ground
18	+5V	← PR	50 mA max.
19 ⋮ 30	0V		Signal ground
31	$\overline{\text{INPUT TRIME}}$	→ PR	Initializing signal
32	$\overline{\text{FAULT}}$	← PR	End of paper or during alarm
33	0V		Signal ground
34	-		(Not used)
35	HILEVEL	← PR	High level (3.3 kΩ)
36	$\overline{\text{SELIN}}$	→ PR	Select in

• Connector pin arrangement

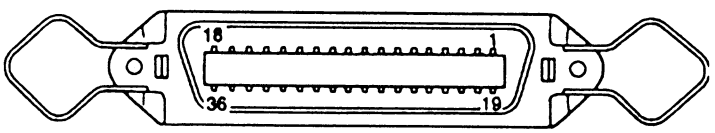

4) Signal Level

- LOW : 0 V to +0.8 V
- HIGH : +2.4 V to 5.0 V

5) Interface Circuit

a) Receiving Circuit

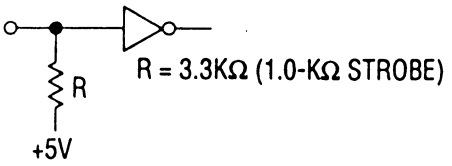

b) Sending Circuit

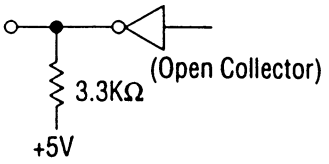

6) Timing Charts

a) Data Receiving Timing (Compatible Mode)

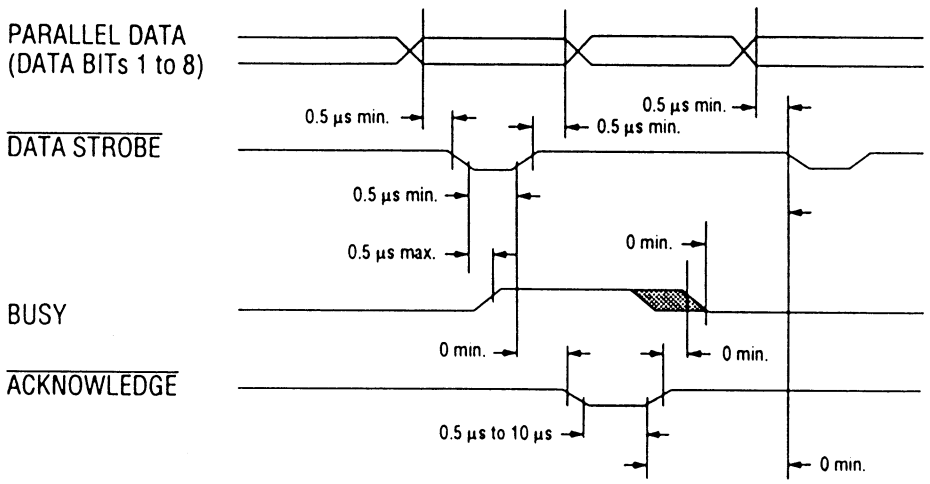

b) Data Receiving Timing (Burst Mode)

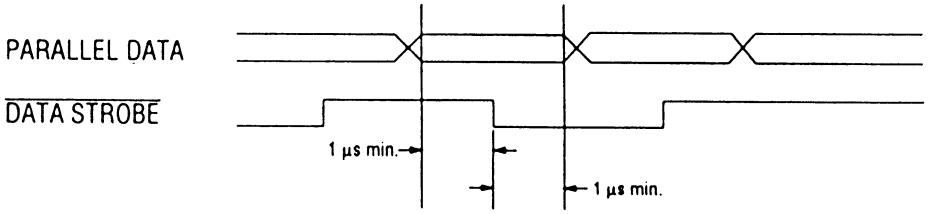

c) Data Sending Timing (Nibble Mode)

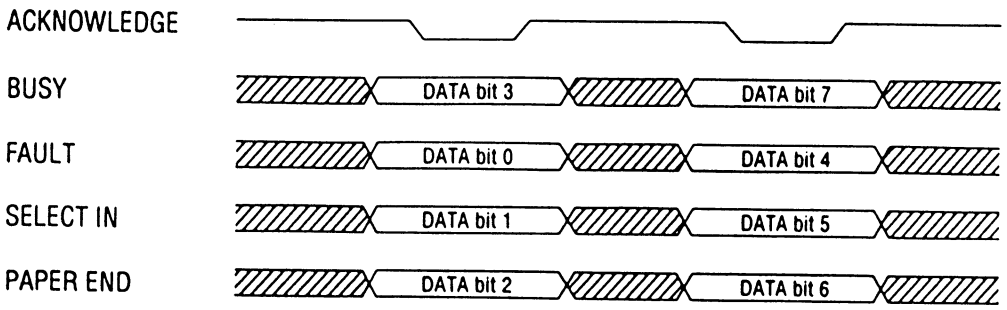

d) On-line → off-line switching timing by ON-LINE SW (HP4 emulation)

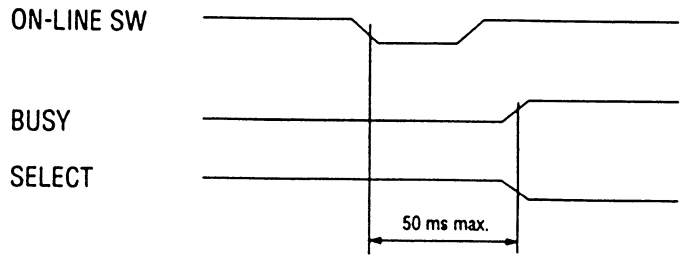

e) Off-line → on-line switching timing by ON-LINE SW (HP4 emulation)

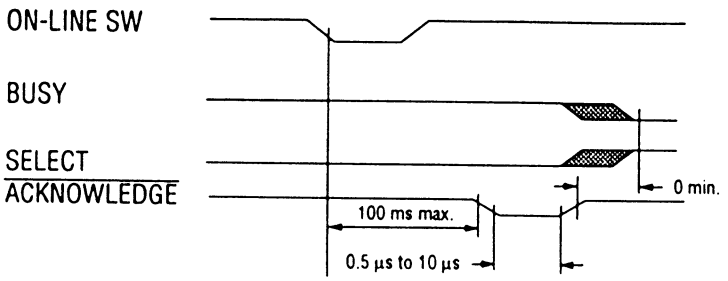

f) INPUT PRIME timing (when set to the effective INPUT PRIME signal on HP4 emulation)

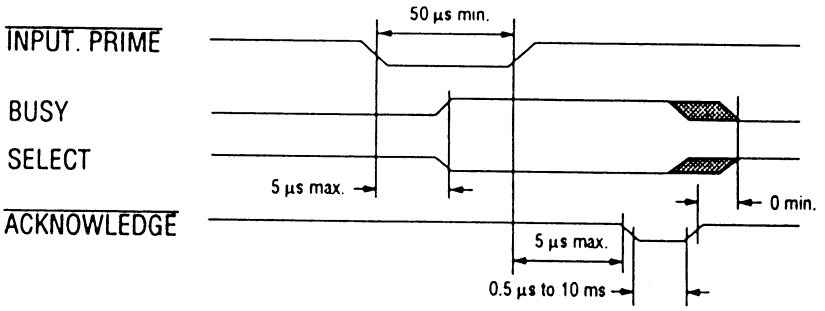

7) Interface Parameter Setting (OL610ex)

The following settings are possible by pressing ENTER / Copies key, after selecting the display contents of the LCD of the operator panel by using NEXT + / Demo and LAST - / Paper Size keys.

Settings are retained even when the printer power is turned off.

By pressing ON LINE key, menu setting mode is completed and the printer returns to ON-LINE state.

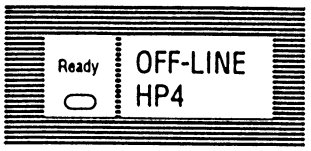

Keep MENU 1 / Menu 2 key down for more than 2 seconds and bring the printer into menu setting mode (level 2). Next, press MENU 1 / Menu 2 key 4 times.

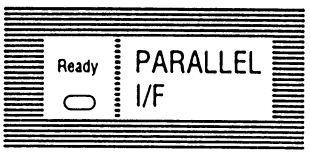

"PARALLEL I/F" is displayed on the LCD.

Press ENTER / Copies Key.

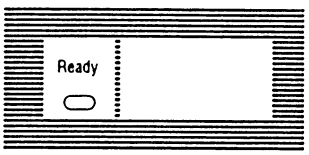

Item	I-PRIME
Contents of Display	Function
OFF	I-PRIME signal ignored
ON	I-PRIME signal effective

Factory Setting: OFF

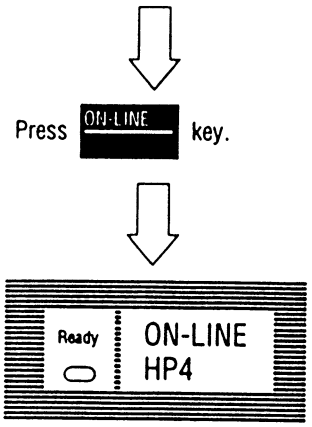

Setting completed.

Appendix B LOCALTALK (RS422) SERIAL INTERFACE (PS Board Option)

1) Connector

- Printer side : 8-pin mini DIN receptacle
  Type TCS7187-01-201 (made by HOSHIDEN) or equivalent
- Cable side : 8-pin mini DIN plug
  Type TCP7180-01-110 (made by HOSHIDEN) or equivalent

2) Cable

- To be shielded cable
- Cable length
  LocalTalk
  Defined max. length : 1,000 ft. (305 m) (It is the maximum length for a LocalTalk network.)
  Recommended max. length : 10 ft. (3 m) (For noise prevention)
  RS422 : 6 ft. (1.8 m) max.

3) Interface signal

Pin No.	Signal Name	Abfreviation	Signal Direction	Description
1	–			(Not used)
2	Sync. signal	SYNC	← PR	(Not used)
3	Transmit data minus	TxD-	← PR	Transmit data minus polarity
4	Signal ground	SG		Signal ground
5	Receive data minus	RxD-	→ PR	Receive data minus polarity
6	Transmit data plus	TxD+	← PR	Transmit data plus polarity
7	–			(Not used)
8	Receive data plus	RxD+	→ PR	Receive data plus polarity

• Connector Pin Arrangement

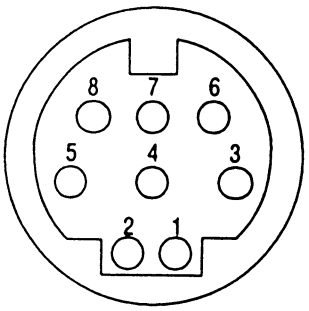

(As viewed from the cable side)

4) Signal level

Differential output : ±5V
Differential input : ±7V

5) Interface circuit

a) Receiving circuit

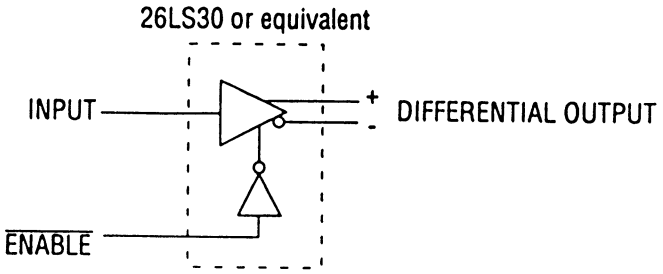

b) Transmitting circuit

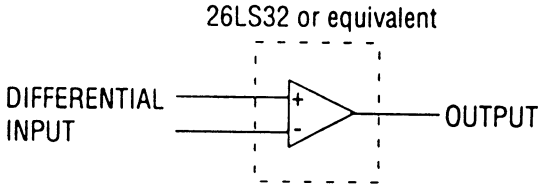

6) Receive margin

7) Communication protocol
- LocalTalk I/F
  LocalTalk protocol
- RS422 I/F
  X-ON/X-OFF protocol

8) Interfacing parameter setting

The following settings are possible by pressing ENTER / PowerSave key after selecting the display contents of the LCD of the operator panel by using ► / Reset and ◄ / Recover keys.

Settings are retained even when the printer power is turned off.

By pressing ON-LINE key, menu setting mode is completed and the printer returns to ON-LINE state.

a) LocalTalk ↔ RS422 switching

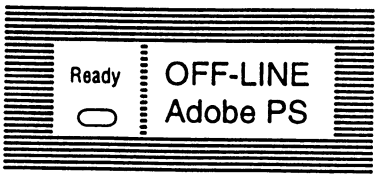

Press MENU 1 / Menu 2 key for 2 seconds to enter the menu mode (level 2), then press MENU 1 / Menu 2 key, 7 times.

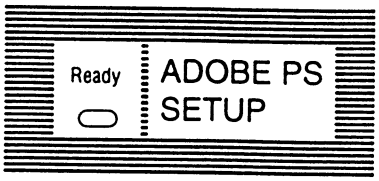

Press ENTER / PowerSave key.

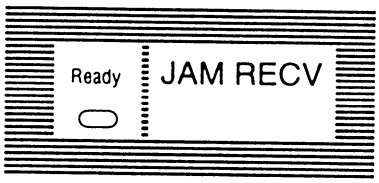

Press MENU 1 / Menu 2 key, 6 times.

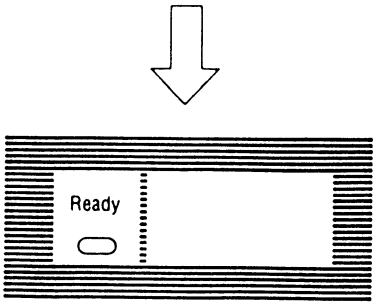

Item	ACTIV 422
Selection	Function
LOCALTK	LocalTalk I/F
RS422	RS422 I/F

Factory Setting: LOCALTK

Press ON-LINE key.

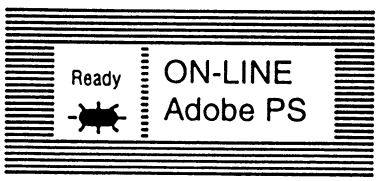

Setting completed.

b) RS422 I/F parameter setting

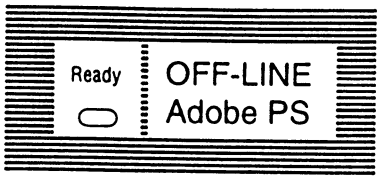

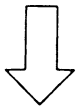

Keep MENU 1 / Menu 2 key down for more than 2 seconds and bring the printer into menu setting mode (level 2).

Next, press MENU 1 / Menu 2 key, 8 times.

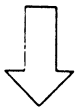

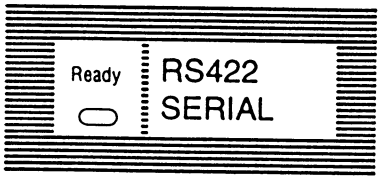

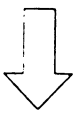

Press ENTER / PowerSave key.

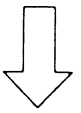

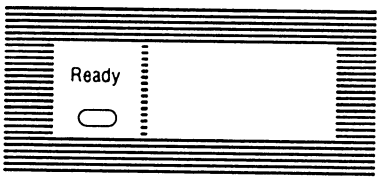

Item	BAUDRATE
Selection	Function
300	300 baud
600	600 baud
1200	1200 baud
2400	2400 baud
4800	4800 baud
9600	9600 baud
19200	19200 baud
38400	38400 baud

Factory Setting: 9600 baud

Press MENU 1 / Menu 2 key.

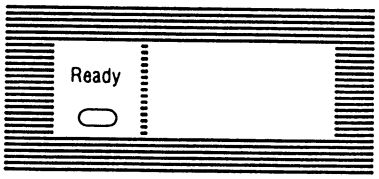

Item	DATABITS
Selection	Function
8 BITS	8 bit length
7 BITS	7 bit length

Factory Setting: 8 bit

Press MENU 1 / Menu 2 key.

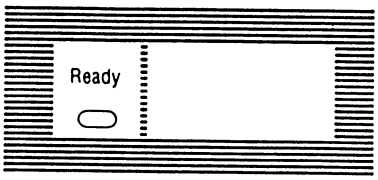

Item	PARITY
Selection	Function
NONE	No parity
EVEN	Even parity
ODD	Odd parity

Factory Setting: No parity

Press ON-LINE key.

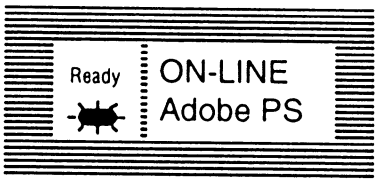

Setting completed.

Appendix C DIAGNOSTICS TEST

1. Maintenance Modes

- The maintenance modes consist of the user maintenance mode opened to the user, and the system and engine maintenance modes for service personnel level.
- Press the Menu key to update each category. The operation returns to the first category after updating the last category.
- Press the Enter key to select and/or execute the function being displayed.
- To exit from any of these modes during category display, press the RECOVER or ON-LINE key and the operation mode will start.

1.1 User Maintenance Mode

- To enter the user maintenance mode, turn the power ON while keeping the Menu key pressed down.
- This mode uses the menu for function selection.
- The user maintenance mode provides the following functions:

(1) Hex Dump

- The data received from the host is dumped in hexadecimal notation to the printer.
- Printing is activated automatically when the received data exceeds one page. If the received data is less than one page, printing can be activated manually be pressing the Form Feed key after changing to the OFF LINE mode. Automatic activation of printing even when the received data is less than one page by selecting the Auto Eject function on the menu.
- To exit from this mode turn the power OFF.

(2) Menu Reset

- All settings for Menu level-1 are reset to the factory default values.
  The menus for all available emulations, including options, are reset to the factory default values.
- The operation mode starts automatically upon completion of resetting.

(3) Drum Counter Reset

- This function resets the drum life data when the user replaces the image drum unit.
- The operation mode starts automatically upon completion of resetting.

(4) X-Adjust / Y-Adjust

- This function sets the first character printing position on the first line.
- The operation mode starts automatically upon completion of resetting.

(5) Operator Panel Menu Disable

- This function is for enabling and disabling of the operation panel menu functions (Menu 1, Menu 2, Tray Select, Copies and Paper Size).

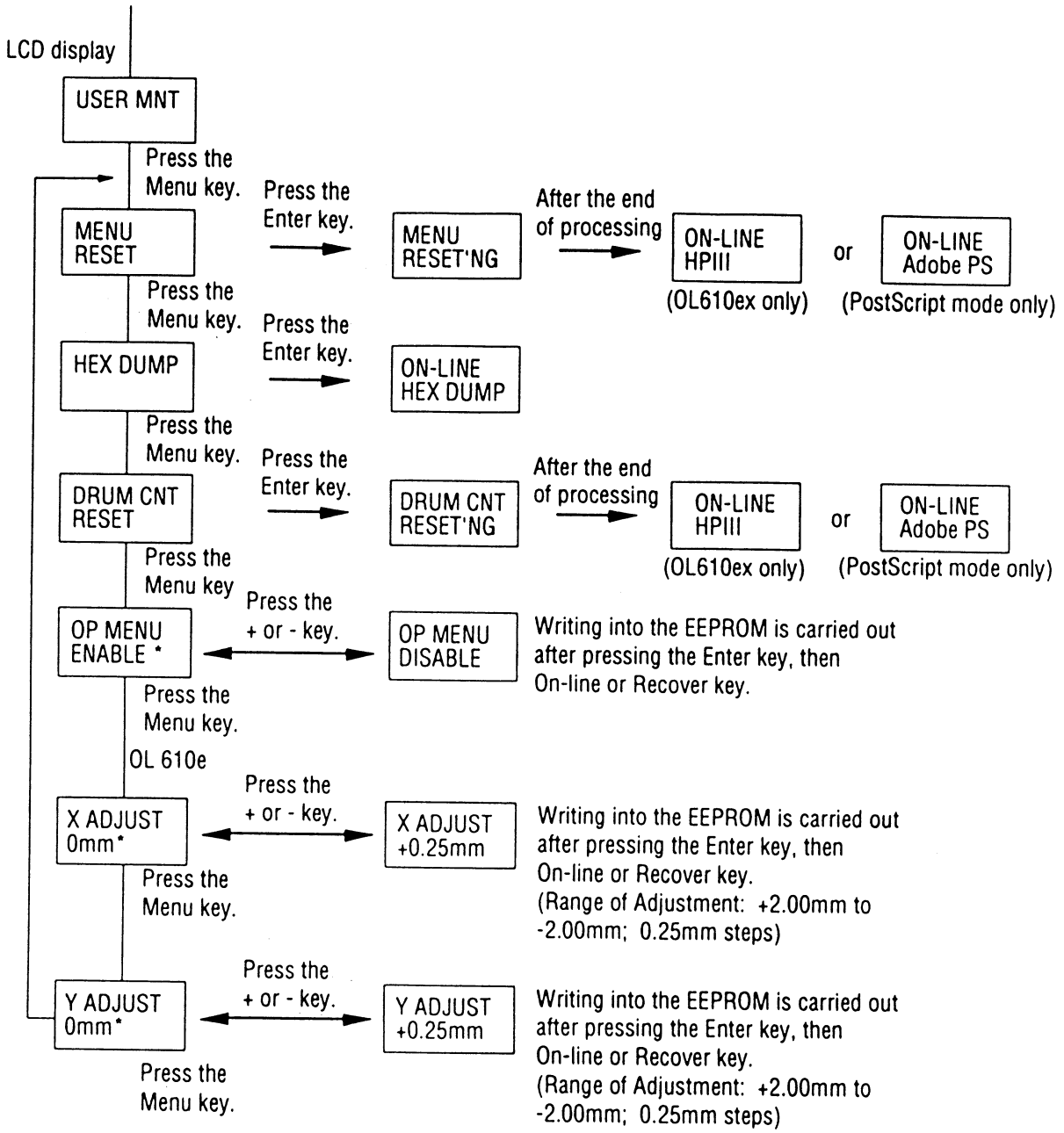

1.2 System Maintenance Mode

(1) The system maintenance mode is set when the power is turned ON while keeping the Recover key pressed down.

(2) This mode adopts the menu for function selection.

(3) The method for exit from this mode depends on the setting.

(4) The system maintenance mode provides the following functions:

(a) Page count display

- The total number of pages counted at the engine block is displayed on the LCD.

(b) Page count printing enable/disable

- This function allows the selection to include (enable) or exclude (disable) the total number of printed pages counted at the engine block at the time of menu printing.

(c) Rolling ASCII continuous printing

- The rolling ASCII pattern is printed continuously for various engine tests.
- Press the ON-LINE key to cancel this mode.
- After the operation, the power is turned off. It will not go to operation mode or any maintenance mode automatically.

(d) EEPROM reset

- All EEPROM areas including Menu level-2 are reset to the factory default values.
- The following items are excluded.

  Engine maintenance items
  REVISIONS (as well as factory user setting)

- Transition to the operation mode occurs completion of resetting.

- The following items are excluded:

  Head drive time setting

  Fine adjustment of printing start position

  Standard tray paper feed amount setting

- Transition to the operation mode occurs upon completion of resetting.

- Press the Menu key to update each category.
  The operation returns to the first category after updating the last category.

(1) System Maintenance Mode Menu System

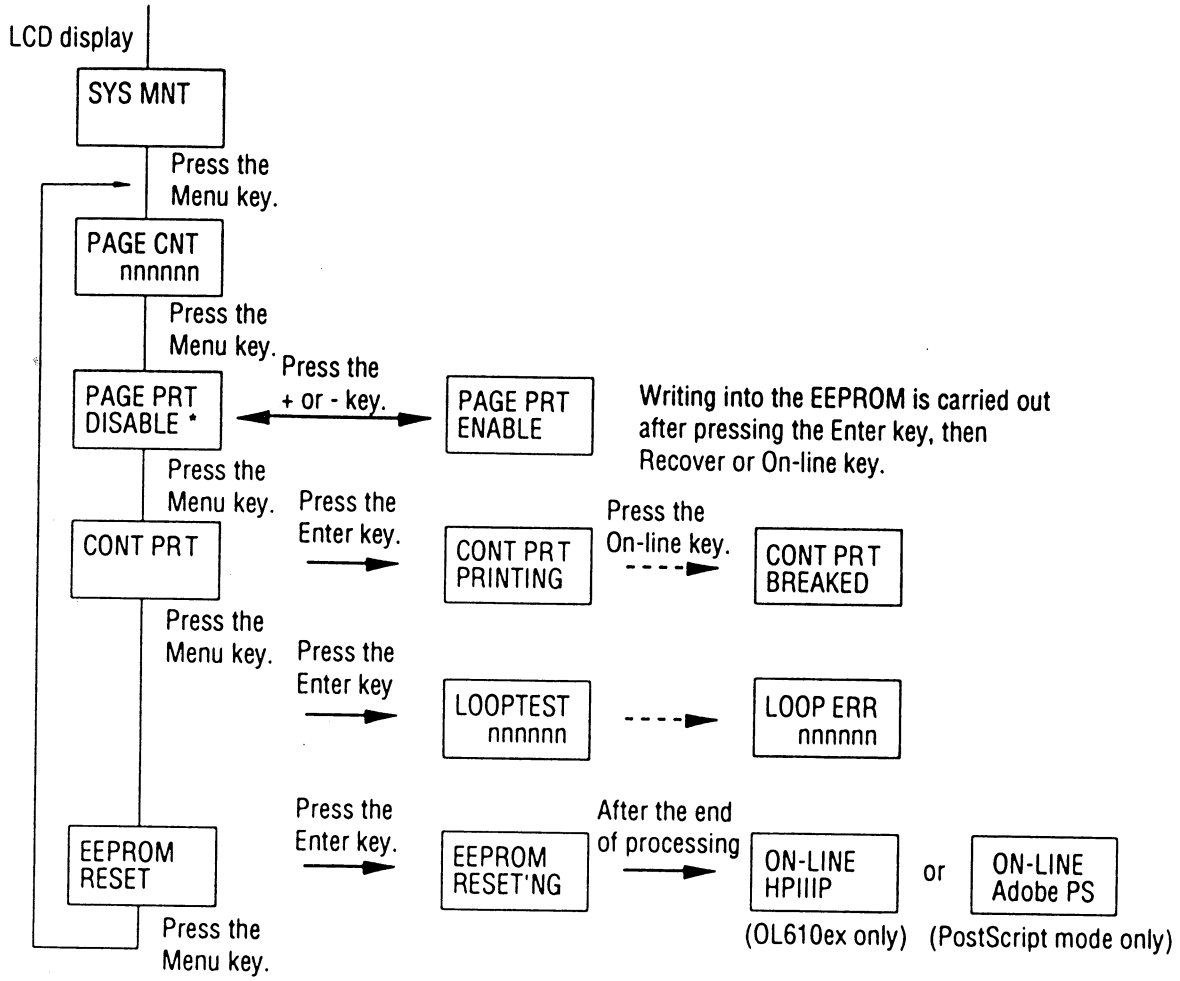

1.3 Engine Maintenance Mode

(1) The engine maintenance mode is activated when the power is turned ON while keeping the Form Feed key and Enter key pressed down.

(2) This mode adopts the menu for function selection.

(3) The method for exit from this mode depends on the setting.

(4) The engine maintenance mode provides the following functions:

(a) Head drive time setting

- Sets the drive time of the LED head.

(b) Head width setting

- Sets the width of the LED head. (39 chips or 40 chips)

(c) Head type setting

- Set the type of the LED head. (300-1W or 300-2W)

Note: The printer uses 300-1W only.

(d) Transfer current setting

- Set transfer current value according to humidity and medium status for optimum printing result.

(e) Printing start position setting

- Sets the printing start position. Do not change the default setting.

(f) Drum count total display

- Displays on the LCD the total number of drum revolution of the unit, counted at the engine block.

(g) Drum count display

- Displays on the LCD the total number of EP drum revolutions counted at the engine block.

(h) Standard tray paper feed setting

- Do no change its default setting since this is a factory setting and were set at the factory.

(i) Second tray paper feed setting

- Do no change its default setting since this is a factory setting and were set at the factory.

(j) Second tray download table selection

- Do not change its default setting since this is a factory setting and were set at the factory.

(k) Multi-purpose feeder setting

- Do not change its default setting since this is a factory setting and were set at the factory.

(l) Multi-purpose feeder download table selection

- Do not change its default setting since this is a factory setting and were set at the factory.

(m) Engine test selection

- Do not change its default setting since this is a factory setting and were set at the factory.

(n) Engine reset

- All EEPROM areas used by the engine block are reset to the factory default values.

  The following items are excluded.

  - Menu level-1
  - Menu level-2
  - Operator panel menu disable/enable
  - Head drive time setting
  - Head width setting
  - Head type setting
  - Transfer current setting
  - Page print disable/enable

- Transition to the operation mode occurs completion of resetting.

- Engine maintenance mode menu system

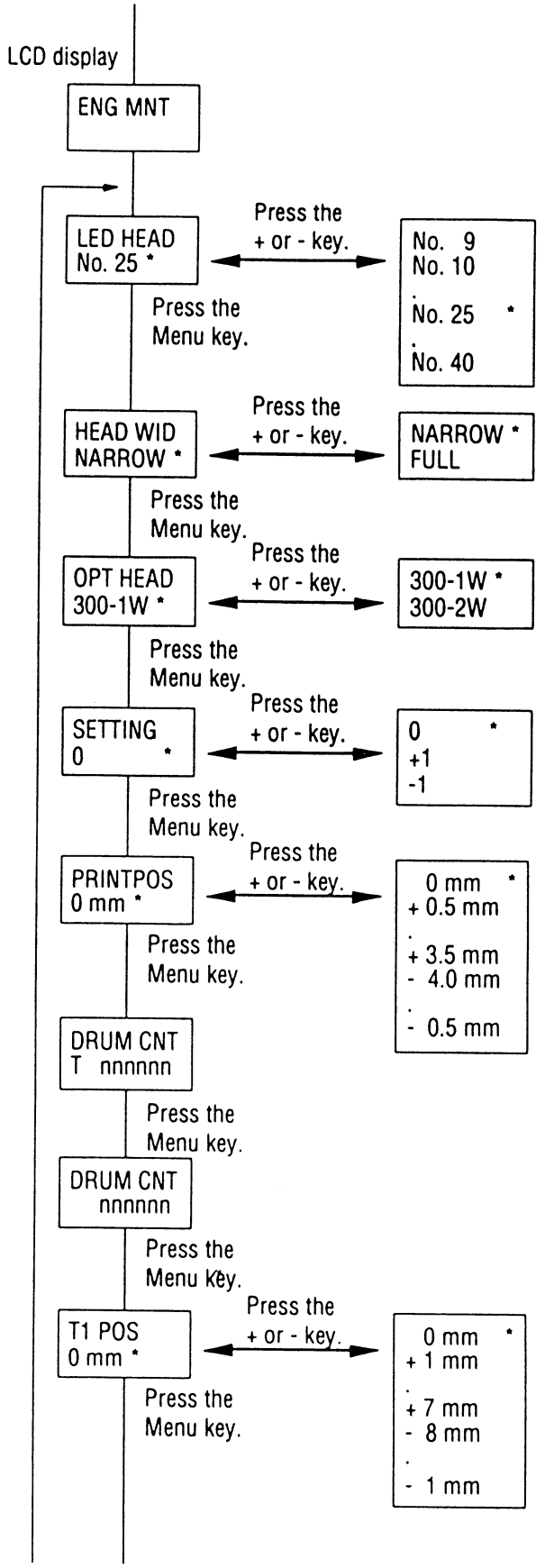

Writing into the EEPROM is carried out after pressing the Enter key, then Recover or On-line key.

Writing into the EEPROM is carried out after pressing the Enter key.

Writing into the EEPROM is carried out after pressing the Enter key.
(***Note:*** Be sure to select "300-1W".)

Be sure to check that it is set to 0.

Be sure to check that it is set to 0 mm.

Be sure to check that it is set to 0 mm.

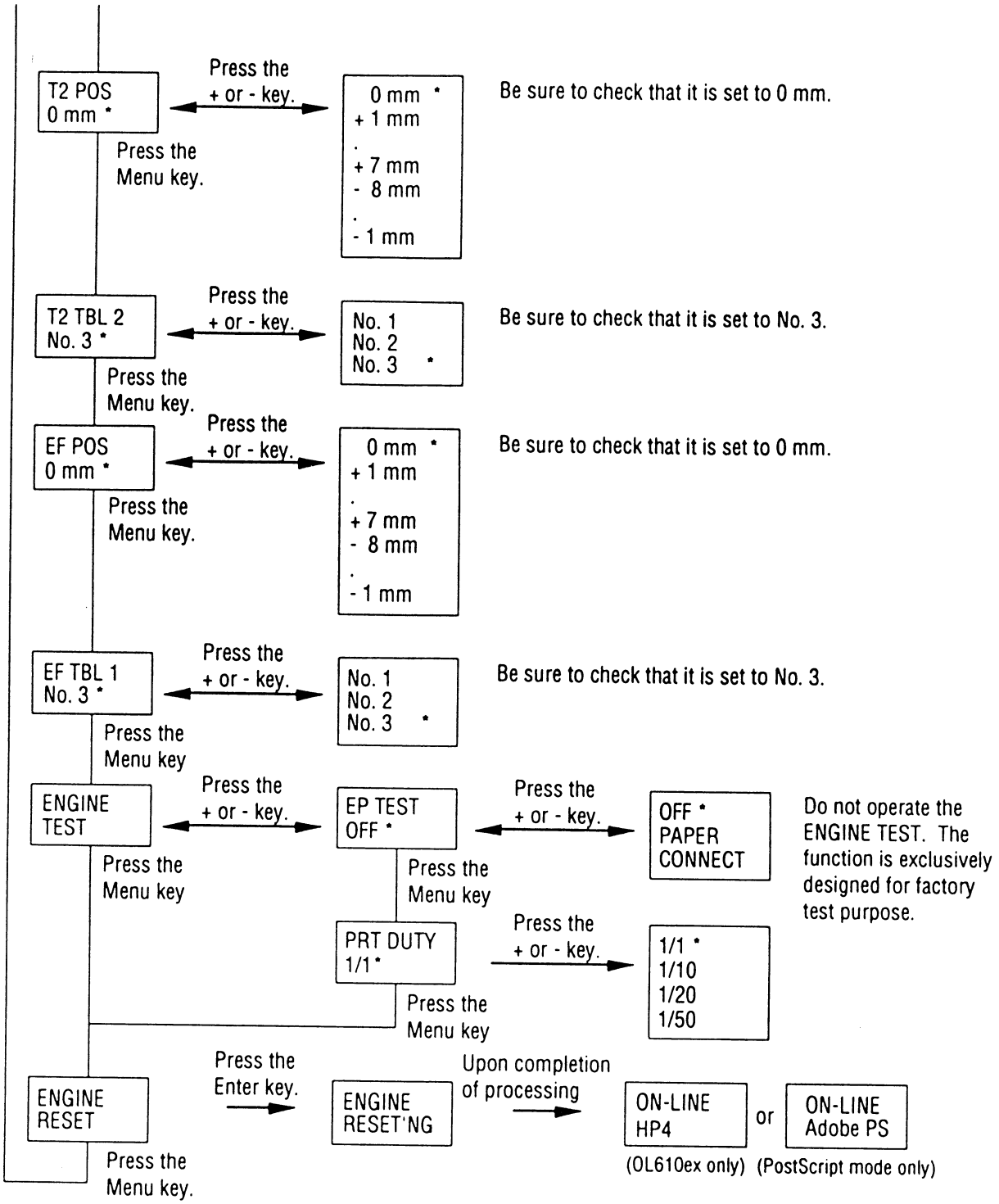
T2 POS
0 mm *
Press the
+ or - key.
0 mm *
+ 1 mm
.
+ 7 mm
- 8 mm
.
- 1 mm
Be sure to check that it is set to 0 mm.
Press the
Menu key.
T2 TBL 2
No. 3 *
Press the
+ or - key.
No. 1
No. 2
No. 3 *
Be sure to check that it is set to No. 3.
Press the
Menu key.
EF POS
0 mm *
Press the
+ or - key.
0 mm *
+ 1 mm
.
+ 7 mm
- 8 mm
.
- 1 mm
Be sure to check that it is set to 0 mm.
Press the
Menu key.
EF TBL 1
No. 3 *
Press the
+ or - key.
No. 1
No. 2
No. 3 *
Be sure to check that it is set to No. 3.
Press the
Menu key
ENGINE
TEST
Press the
+ or - key.
EP TEST
OFF *
Press the
+ or - key.
OFF *
PAPER
CONNECT
Do not operate the
ENGINE TEST. The
function is exclusively
designed for factory
test purpose.
Press the
Menu key
Press the
Menu key
PRT DUTY
1/1 *
Press the
+ or - key.
1/1 *
1/10
1/20
1/50
Press the
Menu key
ENGINE
RESET
Press the
Enter key.
ENGINE
RESET'NG
Upon completion
of processing
ON-LINE
HP4
(OL610ex only)
or
ON-LINE
Adobe PS
(PostScript mode only)
Press the
Menu key.

1.4 Factory User Setting Operation

- Switching of ODA, OEL, and OKI-INT users settings is possible with the factory user setting operation.

- The user factory user setting operation is carried out by turning the power ON while keeping both the Menu key and the NEXT+ or LAST- key pressed down.

(1) Factory ODA Setting Operation:

Turn the power ON while keeping the Menu key and NEXT+ key press down.

(2) Factory OEL Setting Operation:

Turn the power ON while keeping the Menu key and LAST- key pressed down.

(3) Factory OKI-INT Setting Operation

Turn the power ON while keeping the Menu key and FORM FEED key pressed down.

- After executing a factory user setting operation, set the EEPROM areas which are for other than the engine block, to the factory default values.

Note 1: At the time of shipment from the factory, settings corresponding to the destination are made at the factory.

Note 2: PostScript mode
The printer emulation is set to HP4 after the factory user settings are made on printers with S/N leading up to xxxxxx.
For such case, the emulation must be changed to Adobe PS by menu.
For printers with S/N xxxxxx and thereafter, the emulation is set to Adobe PS if the PS board was installed at shipping by the factory user setting operation, and the emulation is set to HP4 if no PS board was installed at the time of shipping.

Appendix D MAINTENANCE UTILITY OVERVIEW

1. OVERVIEW

A Maintenance Utility for OL600ex/OL610ex printer (hereinafter referred to as the Maintenance Utility) is an application program that runs on the Microsoft Windows version 3.1.

It is a software designed to set various settings such as printer engine menu, counter initialization, etc. by sending environment setting command selected by the operator.

Environment setting languages transmitted is OPEL (Oki Print Environment Language) and PJL.

1.1 Purpose of the Maintenance Utility

The Maintenance Utility is an application program which is essentially a collection of command transmission/reception functions for factory setting at the time of shipment from the factory and for maintenance works performed by maintenance engineer at customers premises.

The Maintenance Utility is designed to be used only by service personnel and it should not be released to the end-users.

1.2 Maintenance Utility Functions

Functions supported by the Maintenance Utility are as follows.

(1) Engine Menu

For setting/initializing the engine menu.

(2) Engine Counter Reset

For resetting the engine counter.

(3) Test Print

For printing test data.

(4) Engine Reset

For resetting the engine menu/counter.

(5) RAM Check

For checking RAMs on the printer (Not yet supported).

(6) EEPROM Upload/Download

For uploading/downloading the contents of the EEPROM.

1.3 Software Configuration

The Maintenance Utility consists of the following files.

(1) Maintenance Utility ("MNTDRV.EXE")

The Maintenance Utility executable file.
It handles user interface (display control) and handling of messages transmitted from the Windows.

(2) Initialization File ("MNTDRV.INI")

Data such as menu setting of the Maintenance Utility and the command analysis library, etc. The file is used for initialization of the program.

(3) Command analysis library ("OPEL.DLL", "PJL.DLL")

It is a command analysis library which is called from the Maintenance Utility.

It translates command for the designated printer language, and analyzes status responses.

There is a corresponding file for each printer environment setting language: one file for OPEL and one file for PJL. Appropriate library is selected automatically by the Maintenance Utility to be loaded and executed.

(4) HBP API Library ("OKIHBP.DLL")

It is a DLL that functions to interface the Maintenance Utility and the Virtual Device Driver.

(5) Virtual Device Driver ("VOKIHBPD.386")

It is a virtual device driver that realizes HBP API function by communicating with a printer.

2. MAIN MENU DIALOG

When the Maintenance Utility is triggered, it reads out menu setting, counter data and version data to display on the Main Dialog Box to prompt operator input.

Maintenance items are grouped for display in the following manner.

(1) Engine Menu

Display/Set Engine Menu settings

(2) Engine Counter

Engine counter display/initialization

(3) Status Monitor

Real time display of a printer status

(4) Test Print

Local print and test print

(5) Reload

Read out setting data from a printer

(6) Option

Other functions

The following figure shows a Main Menu Dialog display.

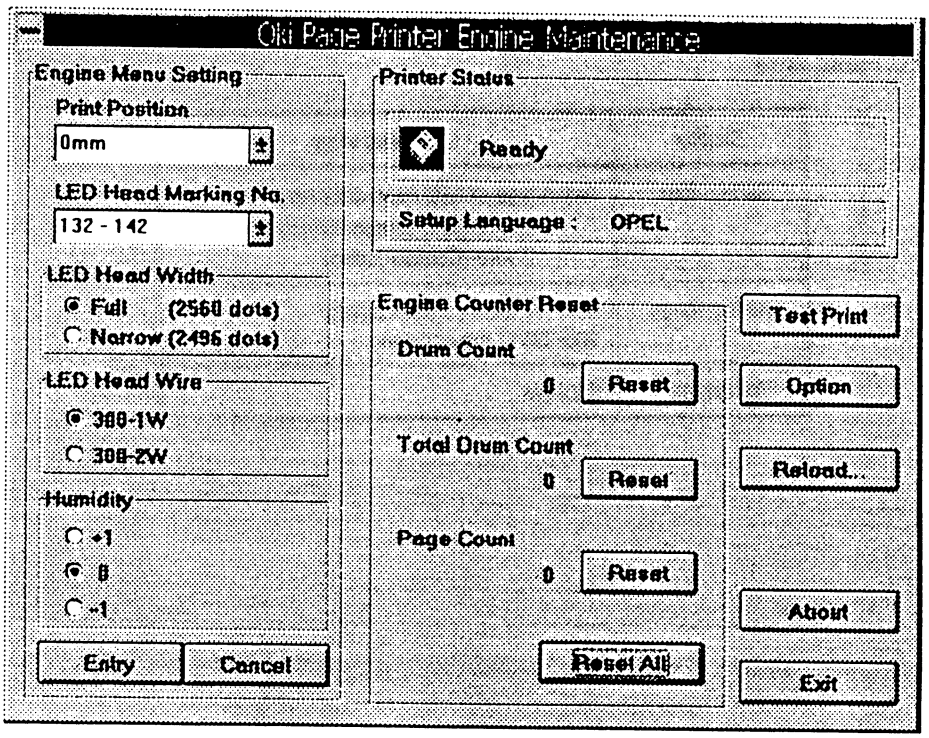

2.1 Engine Menu Group

In the Engine Menu Group, following items may be set.

(1) Print Position

Display	Print Position
Setting item	Correct print start position.
Setting range	–4.00 mm ~ +3.5 mm
F/W default	0.00 mm

(2) LED Head Drive Time

Display	LED Head Marking No.
Setting item	Adjust LED head marking time.
Setting range	–037 ~ 398 – 430
F/W default	155 – 167

(3) LED Head Width

Display	LED Head Width
Setting item	Select number of LED Head dot numbers.
Setting range	Full (2560 dots)/Narrow (2496 dots)
F/W default	Full

(4) LED Head Wire

Display	LED Head Wire
Setting item	Select type of LED Head data wire: 1 wire (Non compensated) or 2 wire (Compensated)
Setting range	300-1W (Non compensated)/ 300-2W (Compensated)
F/W default	300-1W

(5) Humidity

Display	Humidity
Setting item	Adjust transfer current intensity
Setting range	-1/0/+1
F/W default	0

(6) Enter

The values set at the time of the clicking of the "Enter" button is entered as a new setting value.

(7) Cancel

The value set at the time of the clicking of the "Cancel" menu is cleared.

2.2 Engine Counter Group

In the Engine Counter Group, following items may be set.

(1) Drum Count

It displays the number of drum revolution of the EP drum unit, counted at the engine block.

(2) Total Drum Count

It displays the total number of drum revolution of the printer, counted at the engine block.

(3) Page Count

It displays the total number of pages printed after shipment.

(4) Reset

Upon clicking of the "Reset" button, the Message Box is displayed to confirm operator's intention to reset the counter. Upon further clicking, it sends all counter reset command to clear data.

Caution: When page count exceeds 500 pages, the "Reset" button is disabled and it can not be reset.

(5) Reset All

Resetting all counters by clicking of the button. Upon clicking of the "Reset All" button, the Message Box is displayed to confirm operator's intention to reset the counter. Upon further clicking, it sends all counter reset command to clear data.

2.3 Status Monitor

It monitors the printer status and displays the status in real time. For display messages, refer to the table below.

Normal Status

Status	Message
Initializing	Initializing
On-Line	Ready
Off-Line	Ready
Data Exist	Data Exist
Power save mode	Ready Power Saving
Print demo	Printing Demo
Print menu	Printing Menu
Print fonts	Printing Fonts

Warning

Status	Message
Toner low	Ready Toner Low
Toner Sensor problem	Ready Toner Sensor Problem
Change drum	Ready Change Drum Unit
Raster buffer error	Resident Raster Buffer Check Error

Real Time Status

Status	Message
Printing	Printing
Exiting	Printing

Paper Request

Status	Message
Tray1 paper request	Standard Tray Paper# Request
Tray2 paper request	Second Tray Paper# Request
Manual paper request	Manual Paper# Request
Feeder paper request	Multipurpose Feeder Paper# Request

Paper#:	Message:
Exective	Executive Paper
Letter	Letter Paper
Legal 14	Legal14" Paper
Legal 13	Legal13" Paper
Ledger	Ledger Paper
A6	A6 Paper
A5	A5 Paper
A4	A4 Paper
A3	A3 Paper
B5	B5 Paper
B4	B4 Paper
Monarch	Monarch Envelope
COM-10	Com-10 Envelope
DL	DL Envelope
C5	C5 Envelope
JIS B5	JIS B5 Envelope
C4	C4 Envelope
COM-9	Com-9 Envelope

Warming Up

Status	Message
Warming Up	Ready Warming Up

Paper Out

Status	Message
Tray1 Paper Out	Standard Tray Paper Out
Tray2 Paper Out	Second Tray Paper Out
Feeder Paper Out	Multipurpose Feeder Paper Out

Cover Open

Status	Message
Cover Open	Cover Open
Second Tray Cover Open	Second Tray Cover Open

Jam & Size Error

Status	Message
Paper Size Error	Paper Size Error
Input Jam	Paper Input Jam
Feed Jam	Paper Feed Jam
Exit Jam	Paper Exit Jam

Recoverable Alarm

Status	Message
Page Buffer Overflow	Page Buffer Overflow
Macro Buffer Overflow	Macro Buffer Overflow
DLL Buffer Overflow	DLL Buffer Overflow
Receive Buffer Overflow	Receive Buffer Overflow
Send Buffer Overflow	Send Buffer Overflow
Print Overrun	Print Overrun

Unrecoverable Error

Status	Message
Controller Error	Controller Error
Program ROM Check Error	Program ROM Check Error
Font ROM Check Error	Font ROM Check Error .
Resident RAM Check Error	Resident RAM Check Error
EEPROM Check Error	EEPROM Check Error
Option ROM Check Error	Option Software ROM Check Error
Option RAM Check Error	Option RAM Check Error
Fan Motor Error	Fan Motor Error
Fuser Error	Fuser Error
Thermister Error	Thermister Error
Thermister Open	Thermistor Open Check Error
Thermister Short	Thermistor Short Check Error
Toner Sensor	Toner Sensor Error
Ope-Panel Timeout Error	Ope-Panel Interface Timeout Error
Option I/F Timeout	Option Interface Timeout Error
Tray2 Timeout	Second Tray Timeout Error
Feeder Timeout	Multipurpose Feeder Timeout Error
Watch Dog Timeout	Watch Dog Timeout Error
SSIO Error	SSIO Interface Error
Monitor Error	Monitor Error
Monitor Error	Monitor Error
Option Timeout Error	Option Timeout Error
Option Status Error	Option Status Error
Back Ground Program Error	Back Ground Program Error
Stsye Timer Program Error	Stsye Timer Program Error
IPT1 Program Error	IPT1 Program Error

2.4 Test Print Button

It diaplys the Test Print Dialog and performs local print or test file print.

2.4.1 Local Print

Upon selection of button, it transmits local print command to the printer.

No.	Item	Print Test Item
1	Menu Status Print	Menu Print
2	Demonstration	Demo Print
3	Printer Available Font Print	Font Print
4	Change Roller Cleaning Print	Charge Roller Cleaning

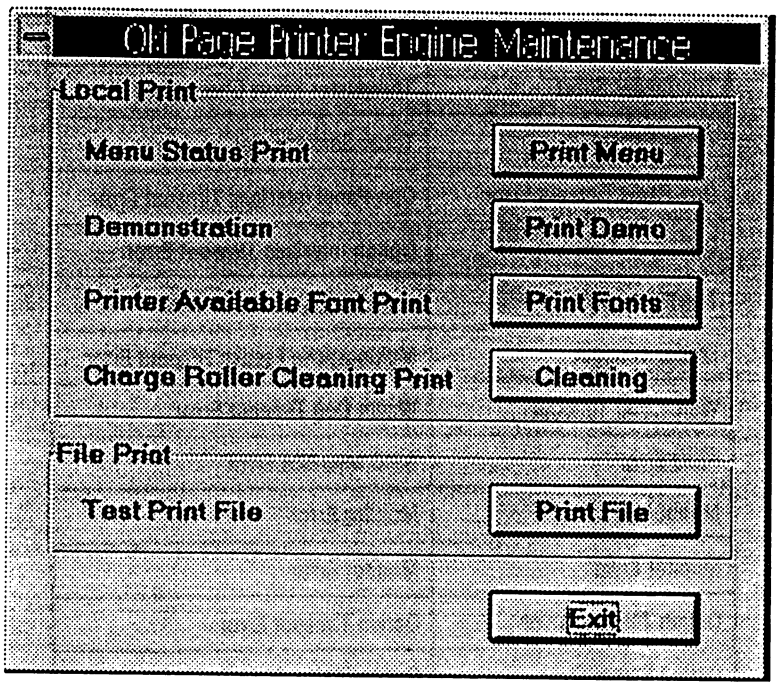

2.4.2 Test File Print

It opens the File selection Dialog box (Windows API) to wait for print file input by an operator.

Print emulation is selected depending on the suffix of the selected file.

XXX.HBP ..... It switches to Hiper Windows emulation and transmits data.
XXX.PCL ..... It switches to PCL emulation and transmits data.
XXX.BIN ..... It switches to PCL emulation and transmits data.
XXX.XXX ..... It switches to PCL emulation and transmits data.

2.5 Option Button

It displays the Option Menu Dialog.

For details, refer to 3. Option Menu Dialog.

2.6 About Button

It opens the About Dialog box to display information on the Maintenance Utility and the printer firmware.

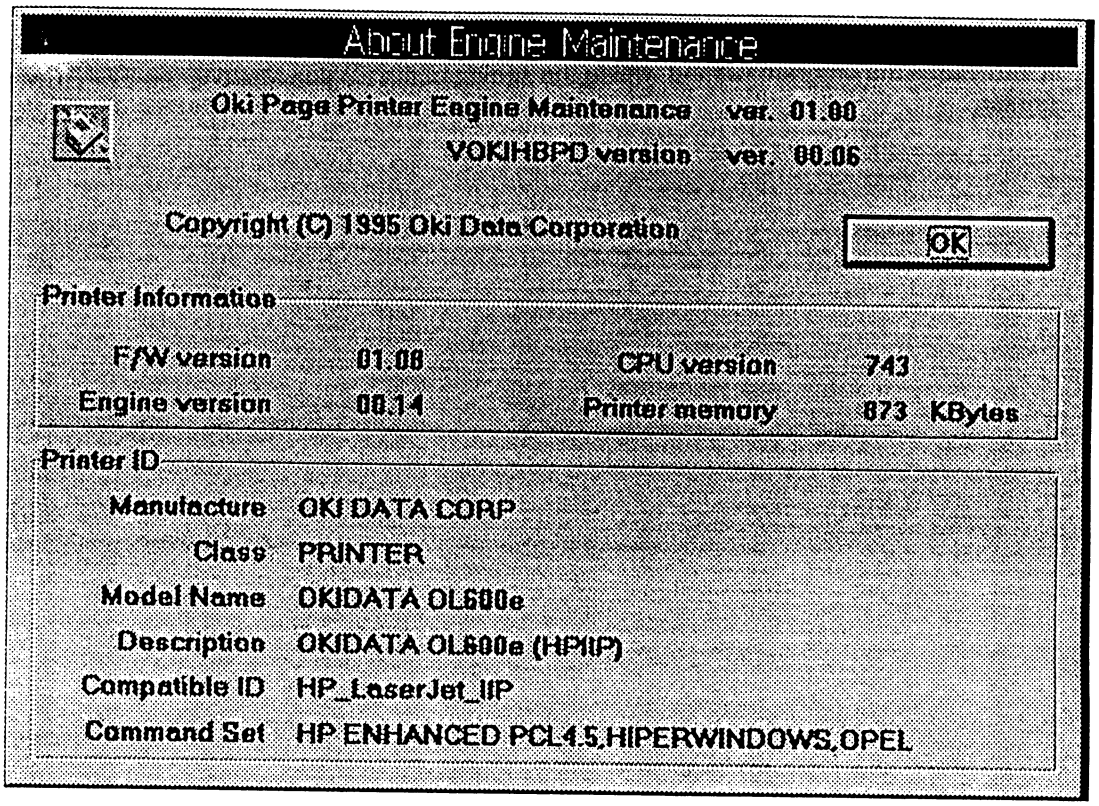

2.7 Reload Button

It performs the same operation as that of the program start up. It reads out printer menu settings and counter values.

This function is mainly used to copy the settings of previous printer into newly replaced printer or newly replaced main control board.

2.8 Exit Button

It ends the Maintenance Utility.

Before it closes, it shows a dialog box to confirm whether to renew the setting when the menu settings displayed on the Engine Menu and the User Default Environment do not match.

When "Yes" is selected:

It writes the setting of the Menu in the EEPROM of the printer and terminates the program.

When "No" is selected:

It terminates the program without writing the setting of the Engine Menu in the EEPROM of the printer.

3. OPTION MENU DIALOG

It displays the Option Menu Dialog and performs functions listed on the menu.

Option Menu items are grouped into three categories.

(1) EEPROM Operation

It displays and sets the Engine menu settings.

(2) H/W Check

It checks the printer hardware.

(3) User Setting

It sets a destination of the printer: (ODA/OEL/INT-A/INT-L)

The figure below shows a sample of the Option Menu Dialog.

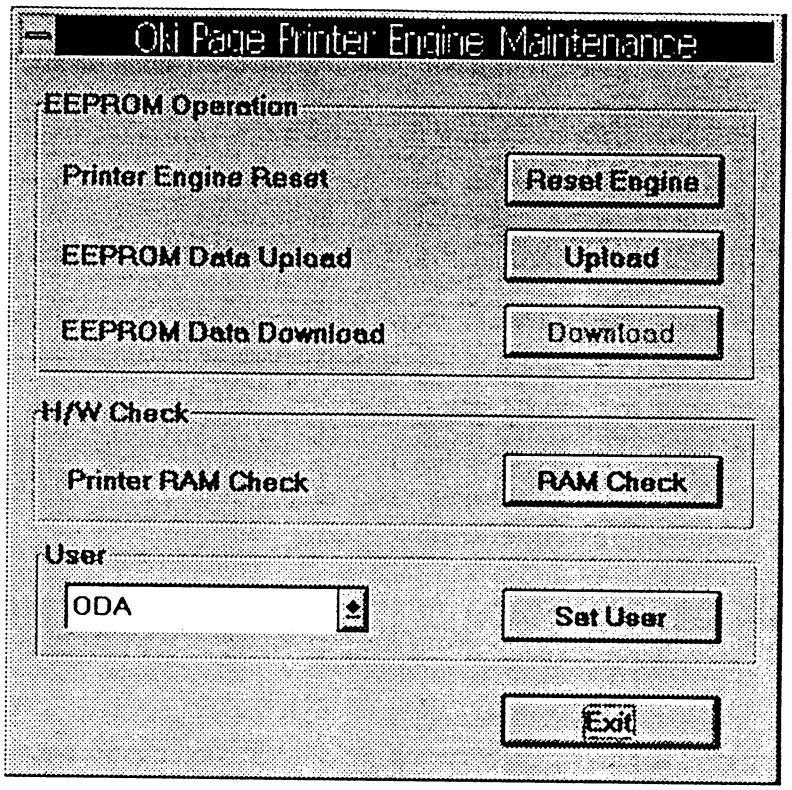

3.1 Reset Engine Button

It sets all Engine Menu including "Print position" and "Setting" except LED Head setting to factory shipment default. All counter is reset to zero. It has the same function as that of the "Engine Reset" of the Engine Menu Mode.

3.2 EEPROM Upload Button

It reads out the Engine Menu setting and the Counter data of the printer being connected and store the data in RAM of the PC.

When the data is stored in RAM of the PC, "EEPROM Download" button becomes effective.

3.3 EEPROM Download Button

It sends the Engine Menu setting and the Counter setting data to the printer to set EEPROM when the "Upload button" has been clicked.

3.4 RAM Check Button (Not supported)

3.5 Set User Button

It sends final destination setting command to the printer to set it for destination shown in the "Combo box".

3.6 Exit Button

It terminates the Option Menu Dialog and returns to the Main Menu Dialog.

4. SETUP DIALOG

The Setup Dialog is displayed upon selection of "Setup" in the Main Menu Dialog. Environment setting language selection and printer port selection are made on the menu.

The figure below shows a typical Setup Dialog.

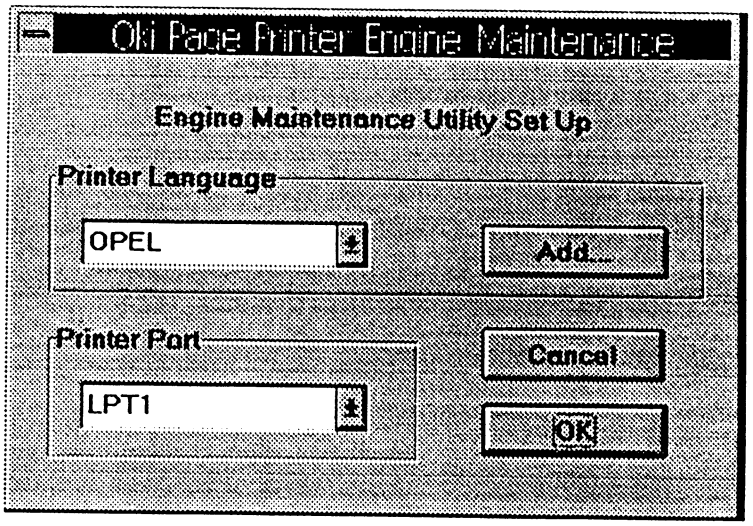

(1) Printer Language

It designates printer environment setting language.

(2) Add (Not supported)

It adds new printer environment setting language.

(3) Printer Port

It designates printer port.

(4) Cancel

The value set at the time of the clicking of the "Cancel" menu is cleared. It returns to the Main Menu Dialog.

(5) OK

The values set at the time of the clicking of the "OK" button is entered into the printer as a new setting value.

Appendix E
Multi-Purpose Feeder Maintenance

PREFACE

This Maintenance Manual is intended for the service person and describes the field maintenance methods for Multi-Purpose Feeder option of OL600ex Series LED Page Printer.

Refer to the Printer Handbook for equipment handling and operation methods.

CONTENTS

1. OUTLINE ..... E - 4

1.1 Functions ..... E - 4
1.2 External View and Component Names ..... E - 4

2. MECHANISM DESCRIPTION ..... E - 5

2.1 General Mechanism ..... E - 5
2.2 Hopper Mechanism ..... E - 5

3. PARTS REPLACEMENT ..... E - 6

3.1 Precautions Concerning Parts Replacement ..... E - 6
3.2 Parts Layout ..... E - 8
3.3 Parts Replacement Methods ..... E - 9
3.3.1 Link ..... E - 10
3.3.2 Separator ..... E - 11
3.3.3 OLEV-11 PCB ..... E - 12
3.3.4 Pulse Motor ..... E - 13
3.3.5 Planet Gear ..... E - 14
3.3.6 Roller-A and B ..... E - 15

4. TROUBLESHOOTING ..... E - 16

4.1 Precautions Prior to the Troubleshooting ..... E - 16
4.2 Preparations for the Troubleshooting ..... E - 16
4.3 Troubleshooting Method ..... E - 19
4.3.1 LCD Status Message List ..... E - 19

5. CONNECTION DIAGRAM ..... E - 21

5.1 Interconnection Diagram ..... E - 21
5.2 PCB Layout ..... E - 22

6. PARTS LIST ..... E - 23

1. OUTLINE

1.1 Functions

This optional Multi-Purpose Feeder is installed on the front section of the printer, and it supplies paper automatically through the operation of pulse motor, which is driven by signals sent from the printer.
The main functions are:

- Paper that can be used:

[Paper Types]
- Standard Paper: Xerox 4200 (20-lb)
- Special Paper: OHP sheets (for PPC), label sheets (PPC sheets)
  * Not guaranteed for OHP sheets with attachments on the edge or reverse side.
- Cut Sheet Size: Letter, Executive, A4, A5, B5, A6
  Special Size: Width 87 to 216mm
  Length 148 to 297mm

[Weight and Thickness]
- 16-lb to 32-lb (60~128 g/m²)
- For Label and OHP Sheets: Label sheets: 0.1 to 0.15mm
  OHP sheets: 0.08 to 0.11mm

* When using sheets which exceed 24-lb, make sure that the paper exits through the face-up route.

1.2 External View and Component Names

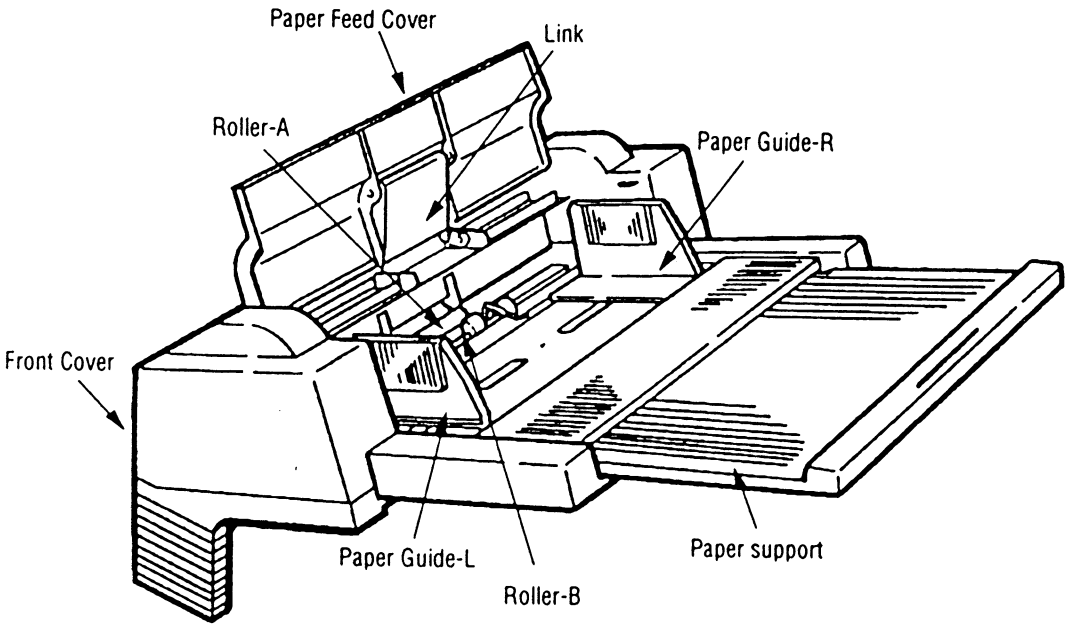

Figure 1-1

2. MECHANISM DESCRIPTION

2.1 General Mechanism

The Multi-Purpose Feeder feeds the paper into the printer by receiving the signal from the printer, which drives the pulse motor inside the Multi-Purpose Feeder, and this motion is conveyed to rotate roller-A and B. The paper is delivered from the separator into the printer.

Once delivered into the printer, the paper is then controlled and fed through by pulse motor (Registration) of the printer.

2.2 Hopper Mechanism

The hopper automatically feeds the printer with the paper being set, single sheet at a time. After the paper is set in the Multi-Purpose Feeder, the pulse motor moves the paper and a single paper caught by the separator is fed into the printer.

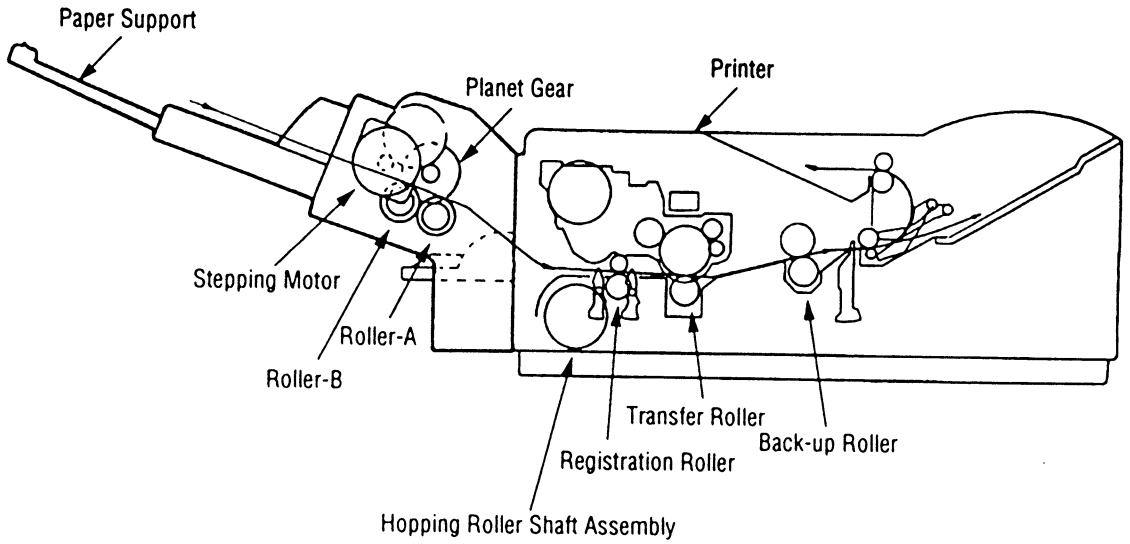

3. PARTS REPLACEMENT

This section covers the procedures for the disassembly, reassembly and installations in the field. This section describes the disassembly procedures, and for reassembly procedures, basically proceed with the disassembly procedures in the reverse order.

3.1 Precautions Concerning Parts Replacement

(1) Parts replacements must be carried out, by first turning the printer power switch off "O" and removing the Multi-Purpose Feeder from the printer.
(2) Do not disassemble the Multi-Purpose Feeder if it is operating normally.
(3) Establish the extent of disassembly suitable for the purpose of the procedure, and do not disassemble any more than necessary.
(4) Only specified service tools may be used.
(5) Disassembly must be carried out according to the prescribed procedures. Parts may be damaged if such procedures are not followed.
(6) Small parts such as screws and collars can easily be lost, therefore these parts should be temporarily fixed in the original location.
(7) When handling printed circuit boards, do not use any glove which may generate static electricity.
(8) Do not place the printed circuit boards directly on the equipment or floor.

[Service Tools]

Table 3-1 shows the tools required for the replacement of printed circuit boards and units in the field.

Table 3-1 Service Tools

No.	Service tools		Q'ty	Place of use	Remarks
1	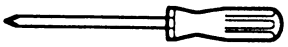	No. 1-100 Philips screwdriver	1	2 ~ 2.5 mm screws	
2	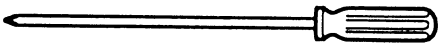	No. 2-100 Philips screwdriver	1	3 ~ 5 mm screws	
3	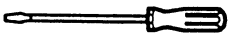	NO. 3-100 screwdriver	1		
4		NO. 5-200 screwdriver	1		
5	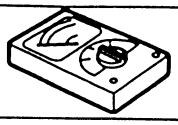	Digital multimeter	1		
6		Pliers	1		
7		Handy cleaner	1		

3.2 Parts Layout

This section describes the layout of the main components.

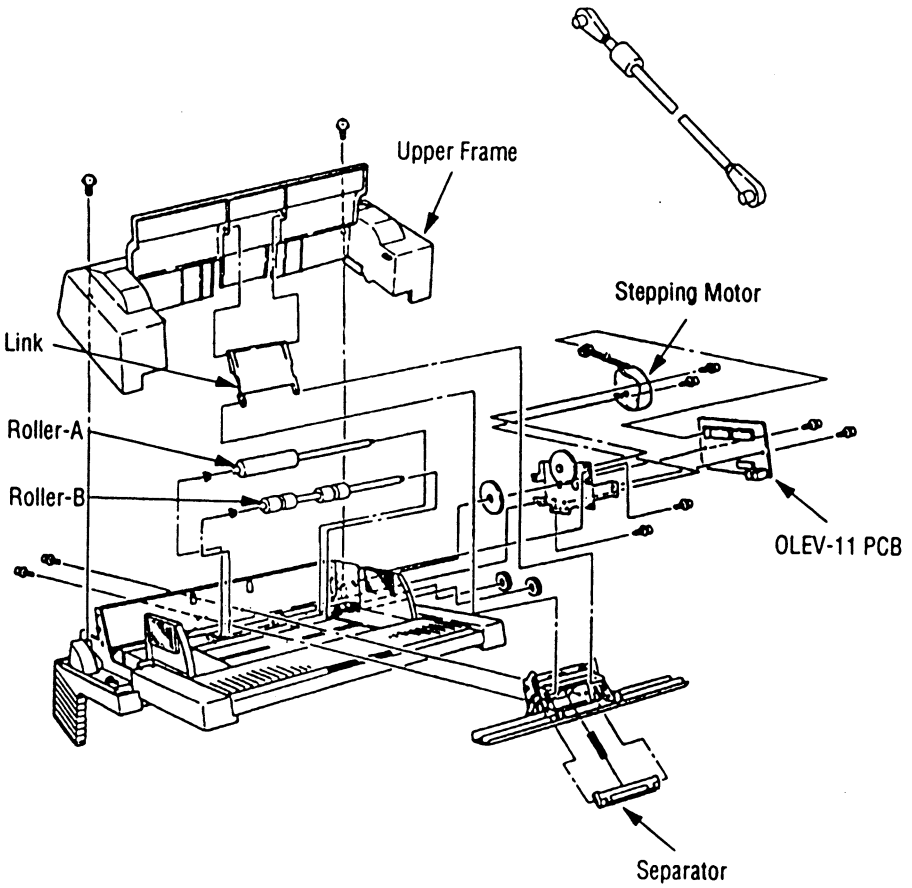

Figure 3-1

3.3 Parts Replacement Methods

This section describes the parts replacement methods for the components listed in the disassembly order diagram below.

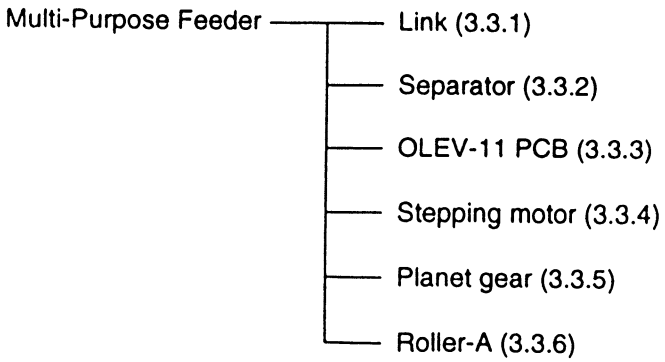

3.3.1 Link

(1) Open paper feed cover ①, and disengage the paper feed cover ① and Link ❸, while lifting the paper hold ②.
(2) Remove the paper hold ② off the arm ④.
(3) Disengage the link ③ from the arm ④, and remove it.

* Be careful not to damage the link and arm.

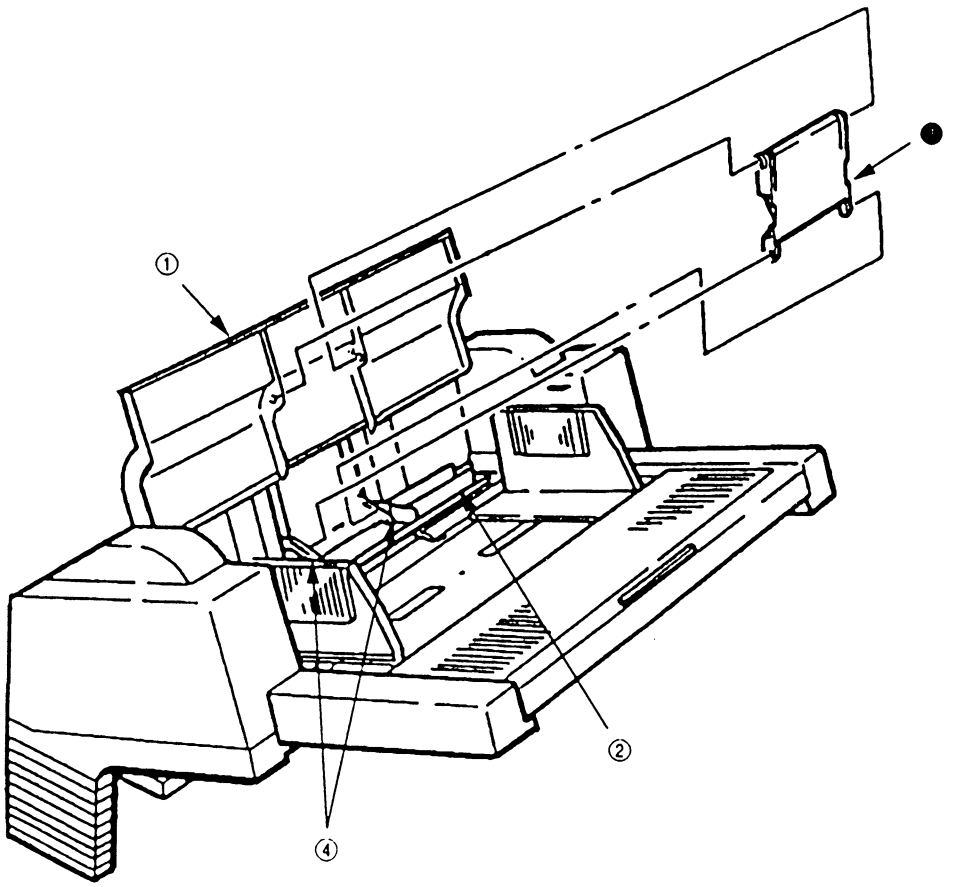

3.3.2 Separator

(1) Turn the power switch off "O" and remove the connector cord.
(2) Disengage the link and paper feeder cover (see 3.3.1).
(3) Remove the 2 screws ①, disengage the locks at 2 locations on the upper frame ② with a screwdriver, and remove the upper frame ②.
(4) Remove the 2 screws ③, and take out the separator assembly ❶.
(5) Disengage the separator ❼ from the separator bracket ⑥ while lifting the paper hold ⑤, and take out the separator
(be careful not to lose the spring ⑧ when you are doing this).

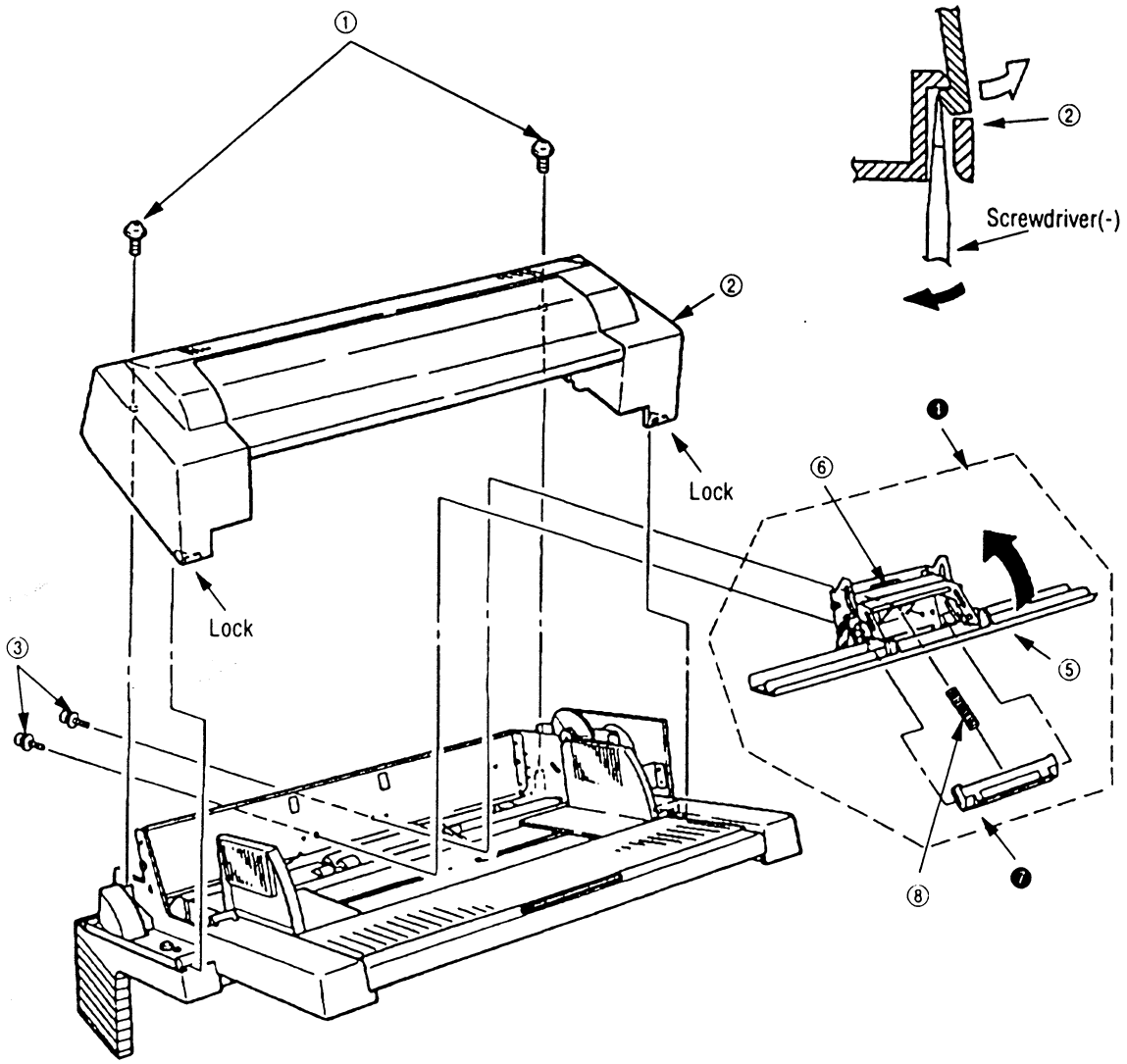

3.3.3 OLEV-11 PCB

(1) Remove the upper frame (see 3.3.2 steps (1) through (3)).
(2) Remove the connector ①.
(3) Remove the 2 screws ②, and remove the OLEV-11 PCB ●.

When mounting the printed circuit board, be careful to make sure that the sensor plate is being set correctly.

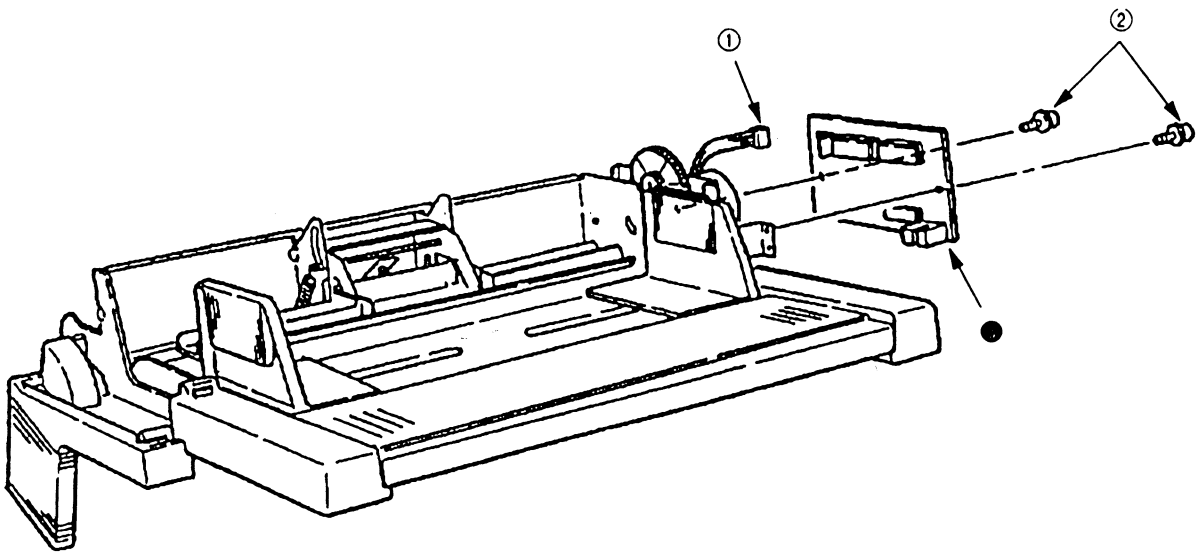

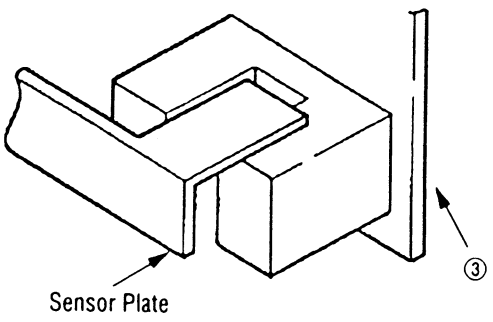

3.3.4 Pulse Motor

(1) Remove the upper frame (see 3.3.2 steps (1) through (3)).
(2) Remove the OLEV-11 PCB (see 3.3.3).
(3) Remove the 2 screws ①, and remove the stepping motor ❷.

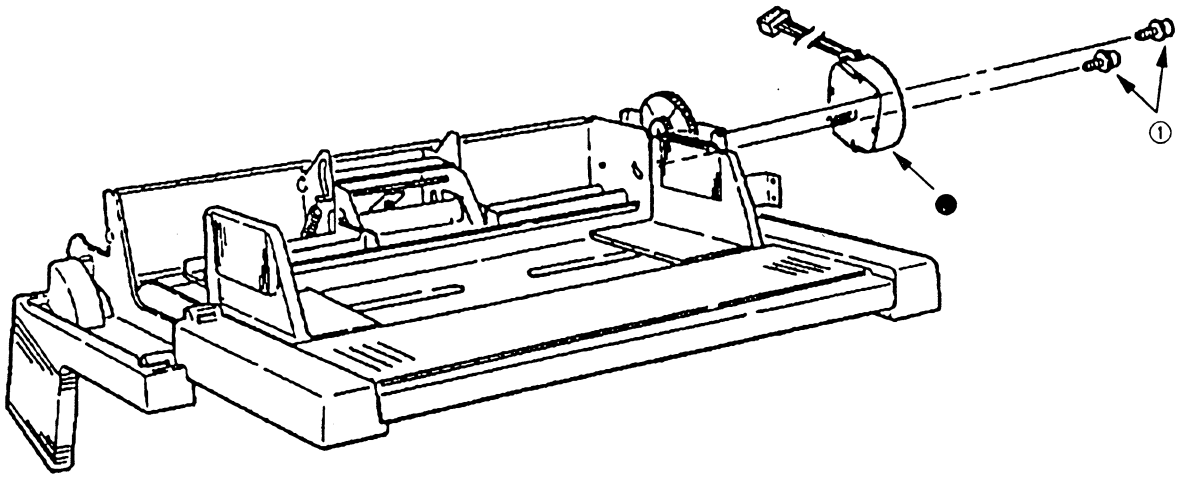

3.3.5 Planet Gear

(1) Remove the upper frame (see 3.3.2 steps (1) through (3)).
(2) Remove the OLEV-11 PCB (see 3.3.3).
(3) Remove the 2 screws ①, and remove the motor bracket assembly ② and planet gear ❸.

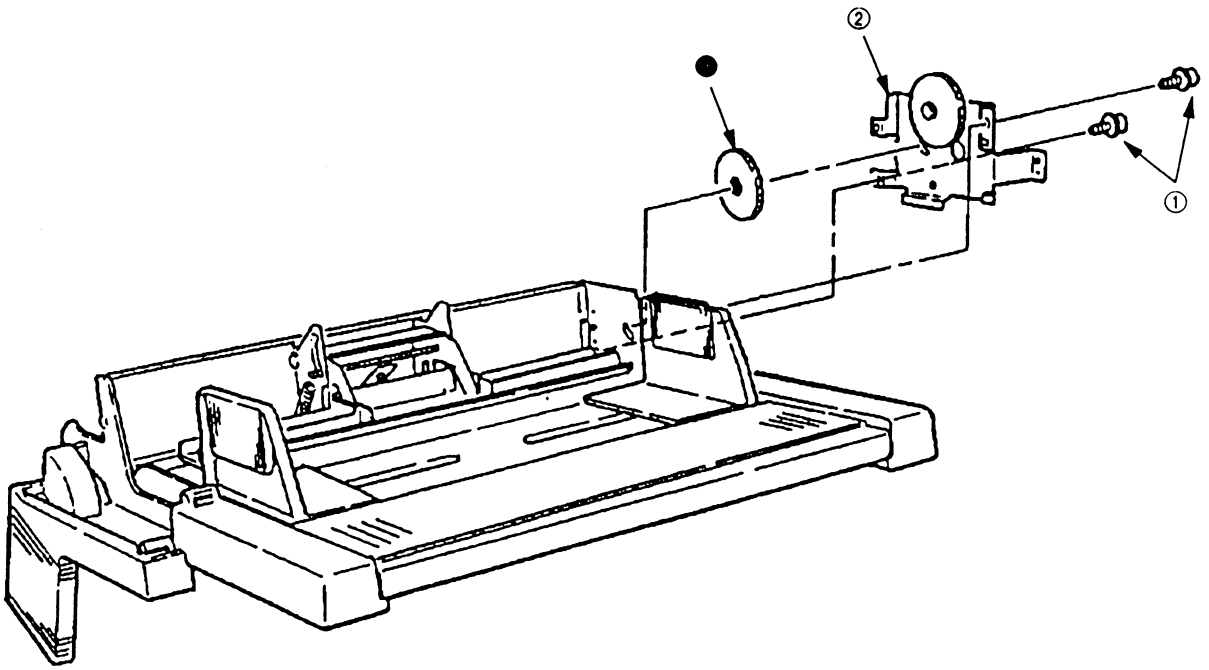

3.3.6 Roller-A and B

While only the removal procedure for roller-A is described here, the removal procedure for roller-B is basically same. When removing roller-B, however, be careful not to deform the sensor lever.

(1) Remove the upper frame (see 3.3.2 steps (1) through (3)).
(2) Remove the separator assembly (see 3.3.2).
(3) Remove the OLEV-11 PCB (see 3.3.3).
(4) Remove the motor bracket (see 3.3.5).
(5) Remove the gear ①.
(6) Shift the roller-A ❷ to the right, lift it on its left side and slide it out (the bearing ③ also comes off while you are doing this, so be careful not to lose it).

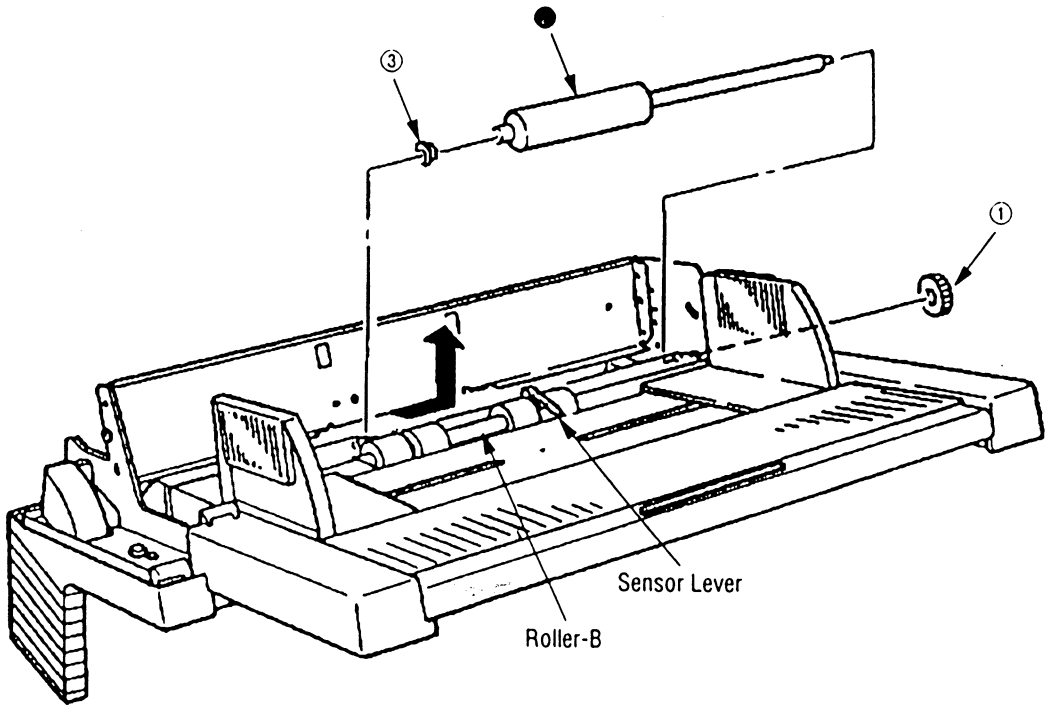

4. TROUBLESHOOTING

4.1 Precautions Prior to the Troubleshooting

(1) Go through the basic checking items provided in the Operator Guide.
(2) Obtain detailed information concerning the problem from the user.
(3) Go through the checking in the conditions similar to that in which the problem occurred.

4.2 Preparations for the Troubleshooting

(1) Display on the operator panel
The status of the problem is displayed on the LCD (Liquid Crystal Display) on the operator panel. Go through the appropriate troubleshooting procedures according to the messages displayed on the LCD.

[ODA]

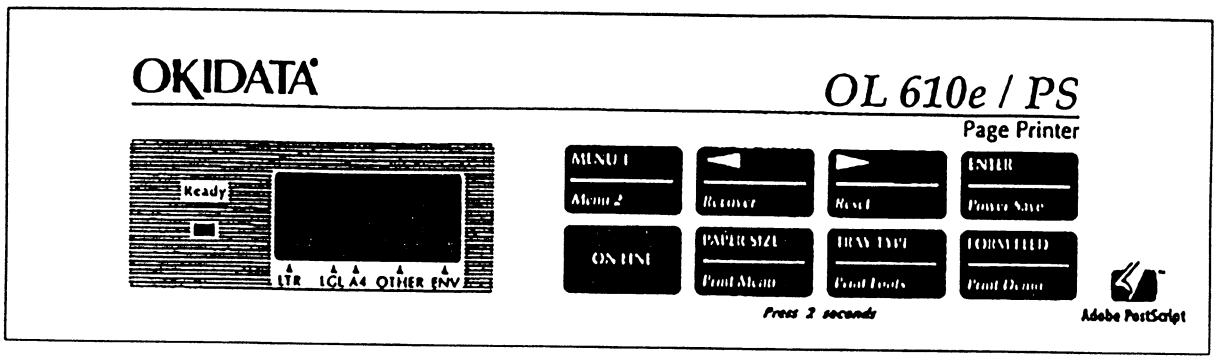

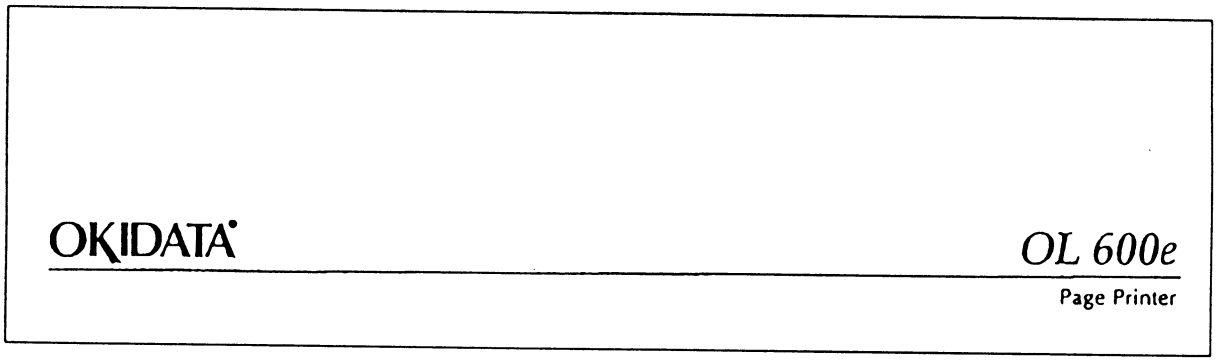

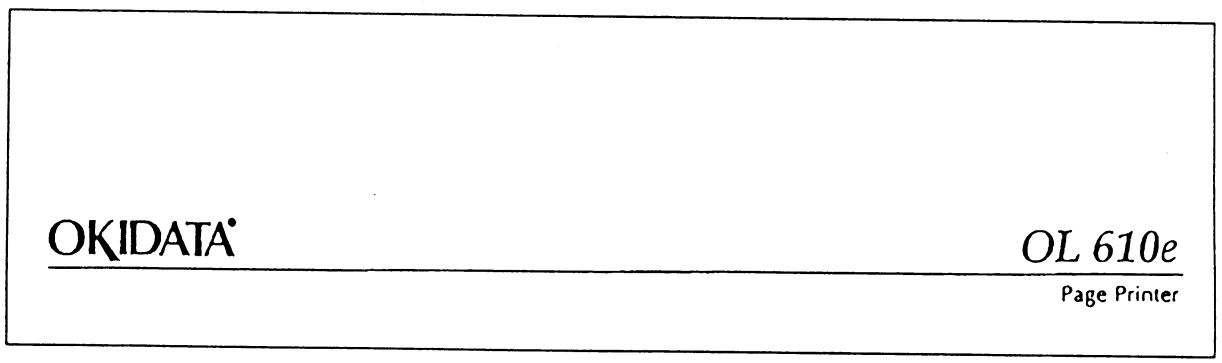

[OEL]

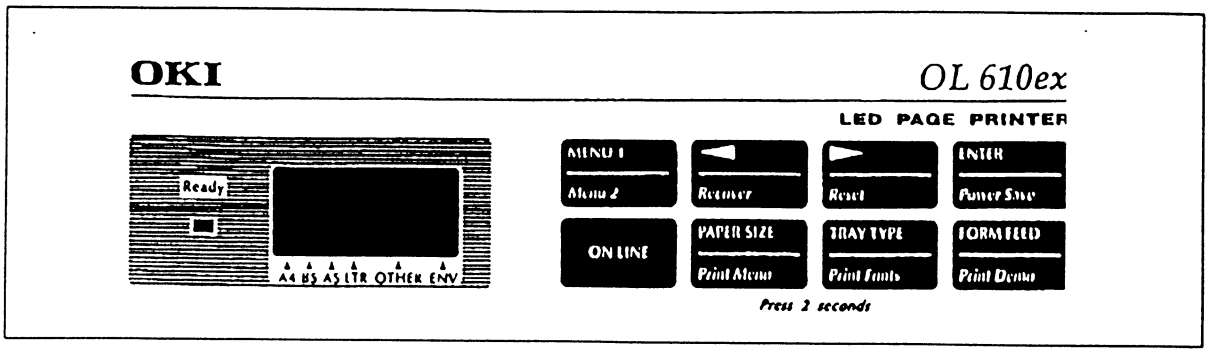
OKI
OL 610ex
LED PAGE PRINTER
Ready
A4 B5 A5 LTR OTHER ENV
MENU ↑
Menu ↓
ON LINE
PAPER SIZE
Print Menu
TRAY TYPE
Print Fonts
FORM FEED
Print Demo
ENTER
Power Save
Press 2 seconds

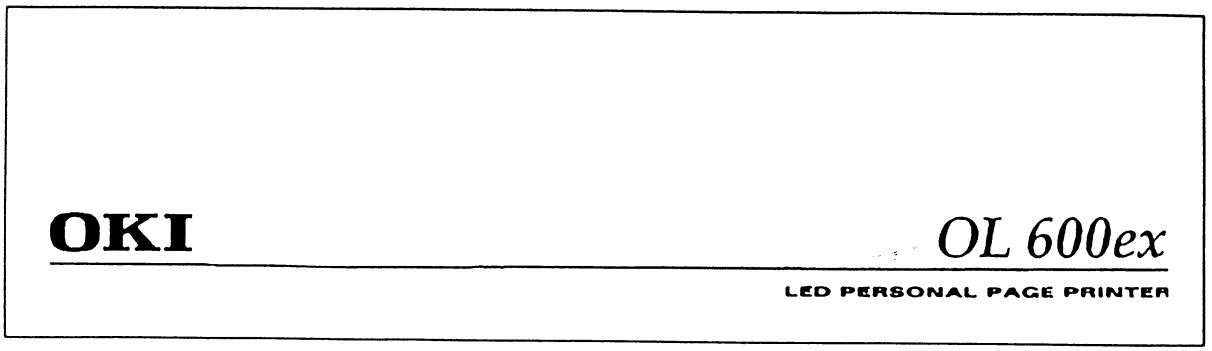
OKI
OL 600ex
LED PERSONAL PAGE PRINTER

[OKI-INT]

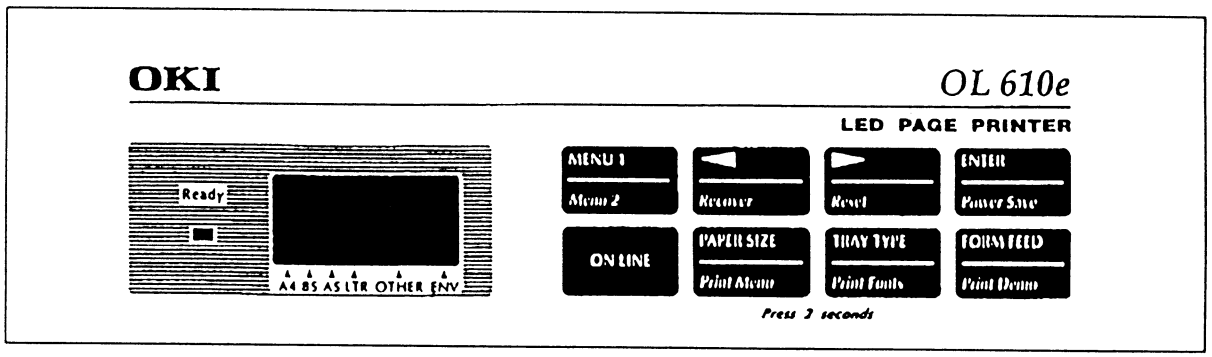
OKI
OL 610e
LED PAGE PRINTER
Ready
A4 B5 A5 LTR OTHER ENV
MENU ↑
Menu ↓
ON LINE
PAPER SIZE
Print Menu
TRAY TYPE
Print Fonts
FORM FEED
Print Demo
ENTER
Power Save
Press 2 seconds

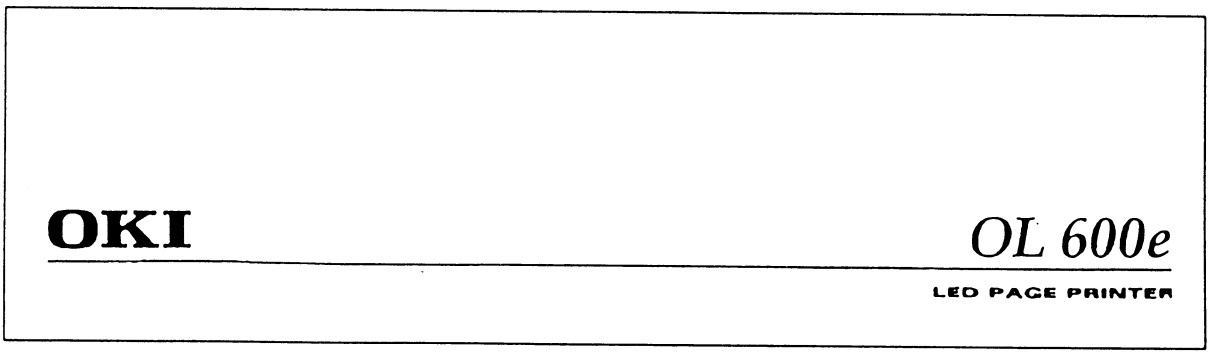
OKI
OL 600e
LED PAGE PRINTER

Status message display

Ready LED display

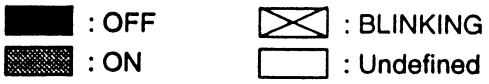

4.3 Troubleshooting Method

When a problem occurs, go through the troubleshooting according to the following procedure.

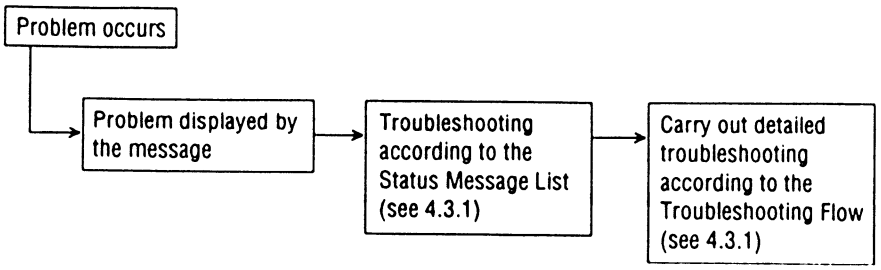

4.3.1 LCD Status Message List

The listing of the statuses and problems displayed in the form of messages on the LCD or PC display is provided in Table 4-1.

Classification	LCD Status Message and PC Display	Description	Recovery Method
Jam error	<Printer LCD Status Message> FEED PAPER INPUT JAM or FEEDER FEED JAM <PC Display Status Message> Paper Input Jam Paper Feed Jam	Notifies of occurrence of jam while the paper is being fed from Multi-Purpose Feeder	• Check the paper in the Multi-Purpose Feeder. Carry out the recovery printing by opening and closing the cover, and turn the error display off. • When the problem occurs frequently, to through the Troubleshooting.
Paper size error	<Printer LCD Status Message> FEEDER SIZE ERR <PC Display Status Message> Paper Size Error	Notifies of incorrect size paper feeding from Multi-Purpose Feeder.	• Check the paper in the Multi-purpose Feeder. Also check to see if there was a feeding of multiple sheets. Carry out the recovery printing by opening and closing the cover, and turn the error display off.
Tray paper out	<Printer LCD Status Message> FEEDER PAPEROUT <PC Display Status Message> Multipurpose Feeder Paper Out	Notifies of no paper state of the Multi-Purpose Feeder.	• Load the paper in Multi-Purpose Feeder.

• (JAM error)

Paper Inlet Jam

- Does paper jam at the inlet when the power is turned on?
  - YES — Is the paper located above the sensor plate (Inlet)?
    - • YES — Remove the paper.
    - NO — Is the sensor plate (Inlet) operating normally?
      - • NO — Replace the sensor plate (Inlet).
      - • YES — Replace the power supply board or inlet sensor.
  - NO — When the paper is fed in, does the paper inlet jam occur?
    - YES — Is the paper being fed to above sensor plate (Inlet)?
      - YES — Is the sensor plate (Inlet) operating normally?
        - • NO — Replace the sensor plate (Inlet).
        - • YES — Clean the Inlet sensor on the power supply board or replace the power supply board or Inlet sensor.
      - • NO — Replace the roller-A or roller-B.
    - NO — Are the roller-A and roller-B rotating?
      - • YES — Set the paper properly.
    - NO — Is the pulse motor turning?
      - • YES — Replace planet gear.
    - NO — Is the connector cord being connected properly?
      - • NO — Connect the connector cord properly.
    - YES — Check the coil resistance (approx. 32Ω) of the pulse motor. Is is normal?
      - • NO — Replace the pulse motor.
    - • YES — Replace the OLEV-11 PCB.

5. CONNECTION DIAGRAM

5.1 Interconnection Diagram

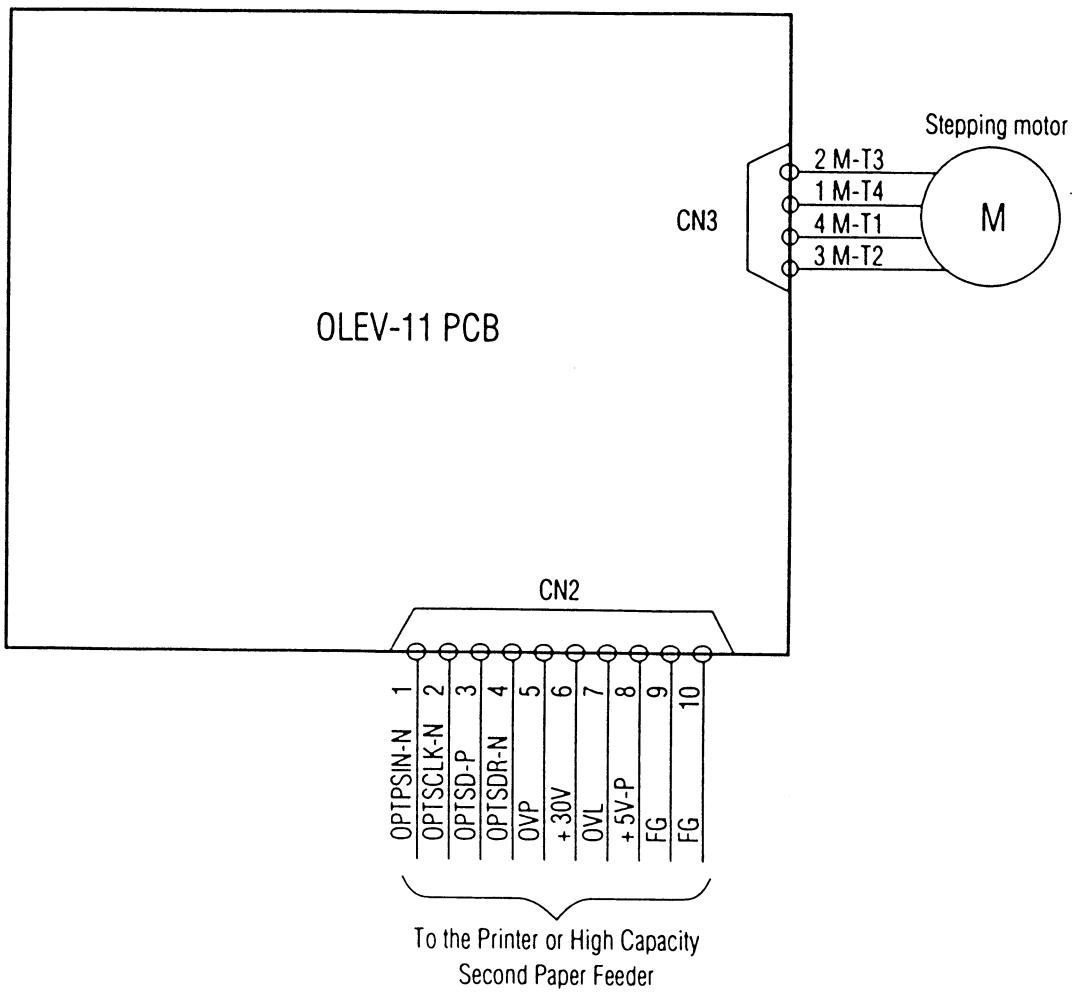

5.2 PCB Layout

OLEV-11 PCB

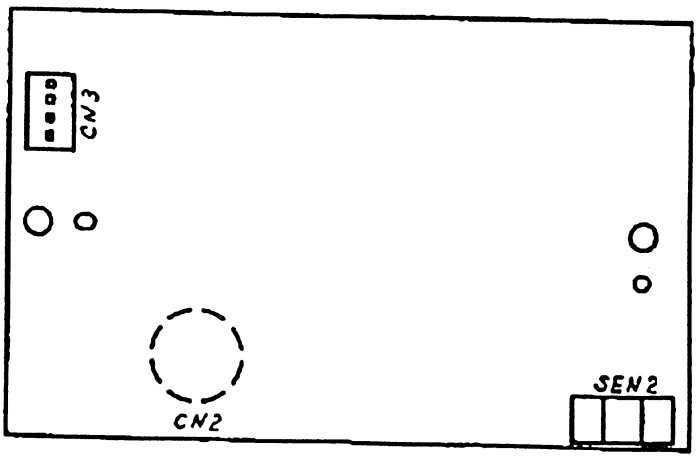

6. PARTS LIST

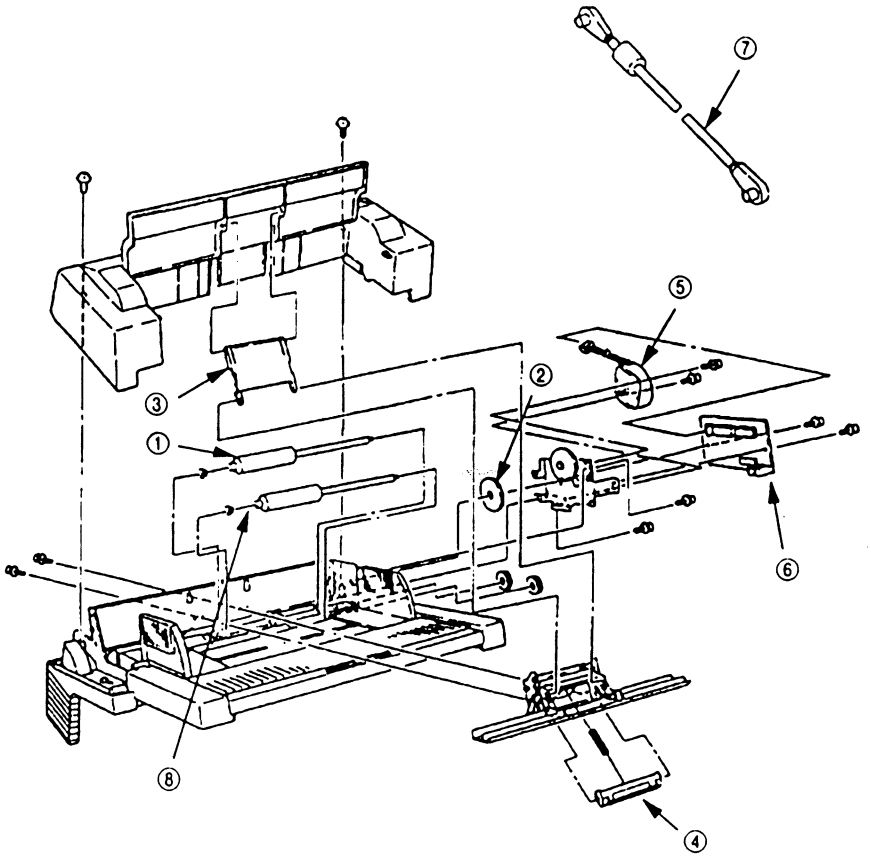

Figure 6-1 Multi-Purpose Feeder

Table 6-1 Multi-Purpose Feeder

No.	Description	Oki-J Part No.	Q'ty	Remark
1	Roller-A	3PB4083-5514P1	1	
2	Planet gear	4PP4083-5520P1	1	
3	Link	3PP4083-5540P1	1	
4	Separator	4PP4083-5544G1	1	
5	Pulse motor	4PB4083-6075P1	1	
6	OLEV-PCB	4YA4121-1014G11	1	
7	Connection cord	3YS4011-3141P1	1	
8	Roller-B	3PB4083-5523P1	1	
9	Separator assy	3PA4083-5549G1	1	Includes 3 and 4 above.

Appendix F
High Capacity Second Paper Feeder Maintenance

PREFACE

This Maintenance Manual is intended for the service person and describes the field maintenance methods for High Capacity Second Paper Feeder option of OL600ex Series LED Page Printer.

Refer to the Printer Handbook for the equipment handling and operation methods.

CONTENTS

1. OUTLINE ..... F - 4

1.1 Functions ..... F - 4
1.2 External View and Component Names ..... F - 4

2. MECHANISM DESCRIPTION ..... F - 5

2.1 General Mechanicsm ..... F - 5
2.2 Hopper Mechanism ..... F - 5

3. PARTS REPLACEMENT ..... F - 6

3.1 Precautions Concerning Parts Replacement ..... F - 6
3.2 Parts Layout ..... F - 8
3.3 Parts Replacement Methods ..... F - 9
3.3.1 Pulse Motor (Hopping) ..... F - 10
3.3.2 OLEV-12 PCB ..... F - 11
3.3.3 Hopping Roller Shaft Assembly and One-way Clutch Gear ..... F - 12

4. TROUBLESHOOTING ..... F - 13

4.1 Precautions Prior to the Troubleshooting ..... F - 13
4.2 Preparations for the Troubleshooting ..... F - 13
4.3 Troubleshooting Method ..... F - 16
4.3.1 LCD Status Message List ..... F - 16

5. CONNECTION DIAGRAM ..... F - 18

5.1 Interconnection Diagram ..... F - 18
5.2 PCB Layout ..... F - 19

6. PARTS LIST ..... F - 20

1. OUTLINE

1.1 Functions

The printer is mounted on top of this High Capacity Second Paper Feeder, and it supplies paper automatically through the operation of pulse motor (Hopping), which is driven by signals sent from the printer.
The main functions are:

- Paper that can be used:

[Paper Type]

- Standard Paper: Xerox 4200 (20-lb)
- Special Paper: OHP sheets (for PPC), Label sheets (PPC sheets); use of envelopes or thick paper is not possible.
- Cut Sheet Size: A4, A5, B5, Letter, Executive, Legal13, Legal14
- Special Size: Paper Width: 87 to 216mm
  Paper length: 190 to 355.6mm

[Weight]

- 16-lb to 24-lb (60 to 90 g/m²)

- Paper setting quantity: 250 sheets of paper weighing 64 g/m²

1.2 External View and Component Names

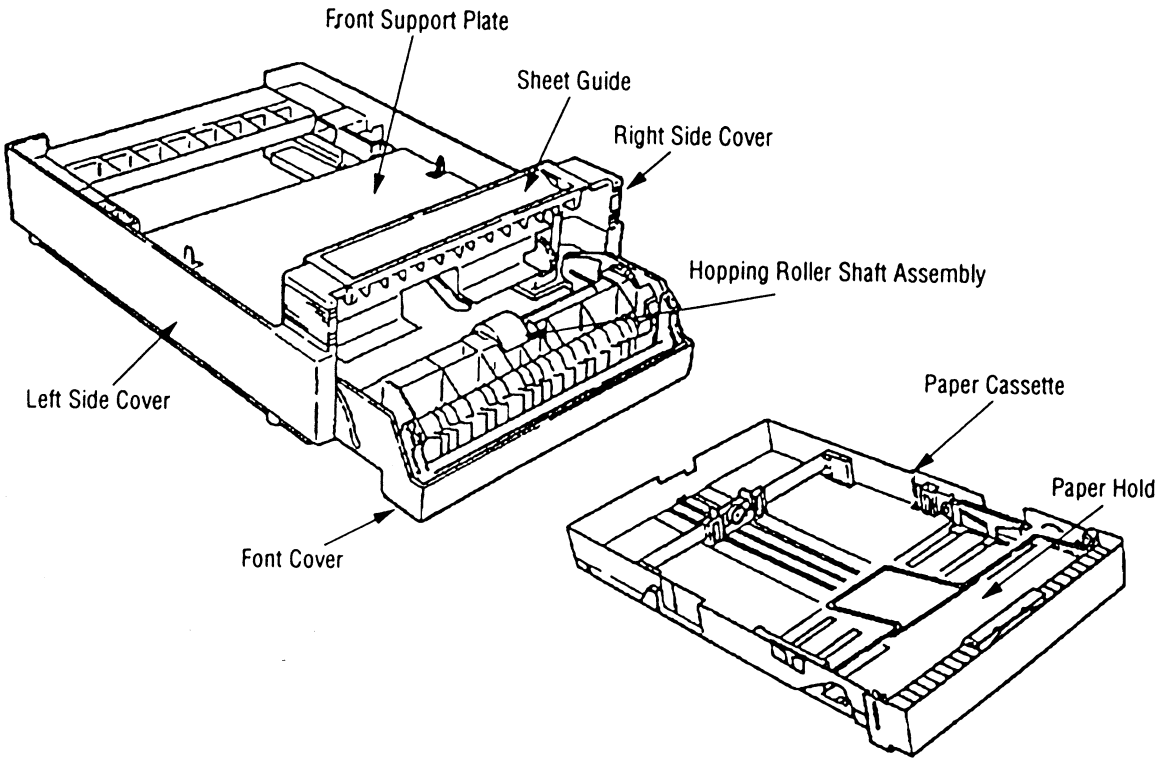

Figure 1-1 External View and Component Names

2. MECHANISM DESCRIPTION

2.1 General Mechanicsm

The High Capacity Second Paper Feeder feeds the paper into the printer by receiving the signal from the printer, which drives the pulse motor inside the High Capacity Second Paper Feeder. This motion is converyed to rotate the One-way clutch of the hopping shaft assembly. The paper is delivered from the hopper into the printer through the turning of the hopping shaft assembly.

Once delivered into the printer, the paper is then controlled and fed through by pulse motor (Registration) of the printer.

2.2 Hopper Mechanism

The hopper automatically feeds the printer with the paper being set, single sheet at a time. When the paper is loaded in the paper cassette, it is then transported by the pulse motor.

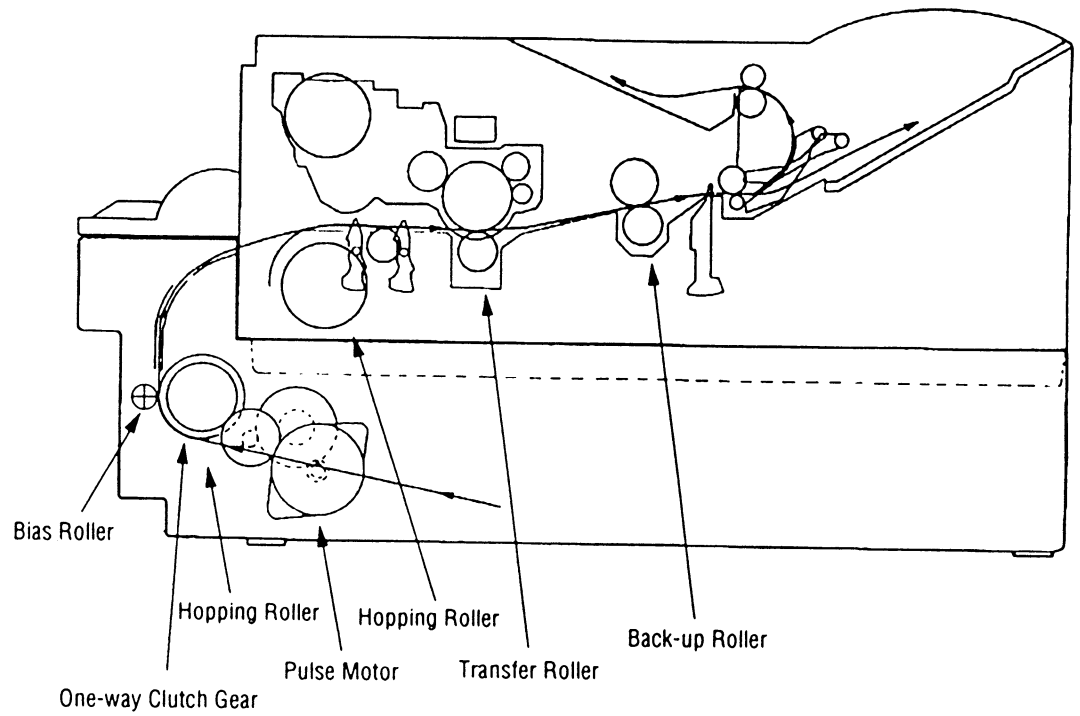

3. PARTS REPLACEMENT

This section covers the procedures for the assembly, disassembly and installations in the field. This section describes the disassembly procedures, and for assembly procedures, basically proceed with the disassembly procedures in the reverse order.

3.1 Precautions Concerning Parts Replacement

(1) Parts replacements must be carried out, by first turning the printer power switch off "O" and removing the High Capacity Second Paper Feeder from the printer.
(2) Do not disassemble the High Capacity Second Paper Feeder if it is operating normally.
(3) Establish the extent of disassembly suitable for the purpose of the procedure, and do not disassemble any more than necessary.
(4) Only specified service tools may be used.
(5) Disassembly must be carried out according to the prescribed procedures. Parts may be damaged if such procedures are not followed.
(6) Small parts such as screws and collars can easily be lost, therefore these parts should be temporarily fixed in the original location.
(7) When handling printed circuit boards, do not use any glove which may generate static electricity.
(8) Do not place the printed circuit boards directly on the equipment or floor.

[Service Tools]

Table 3-1 shows the tools required for the replacement of printed circuit boards and units in the field.

Table 3-1 Service Tools

No.	Service tools		Q'ty	Place of use	Remarks
1	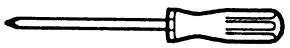	No. 1-100 Philips screwdriver	1	2 ~ 2.5 mm screws	
2	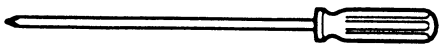	No. 2-100 Philips screwdriver	1	3 ~ 5 mm screws	
3	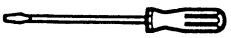	NO. 3-100 screwdriver	1		
4	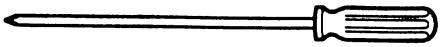	NO. 5-200 screwdriver	1		
5	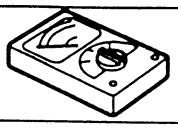	Digital multimeter	1		
6		Pliers	1		
7		Handy cleaner	1		

3.2 Parts Layout

This section describes the layout of the main components.

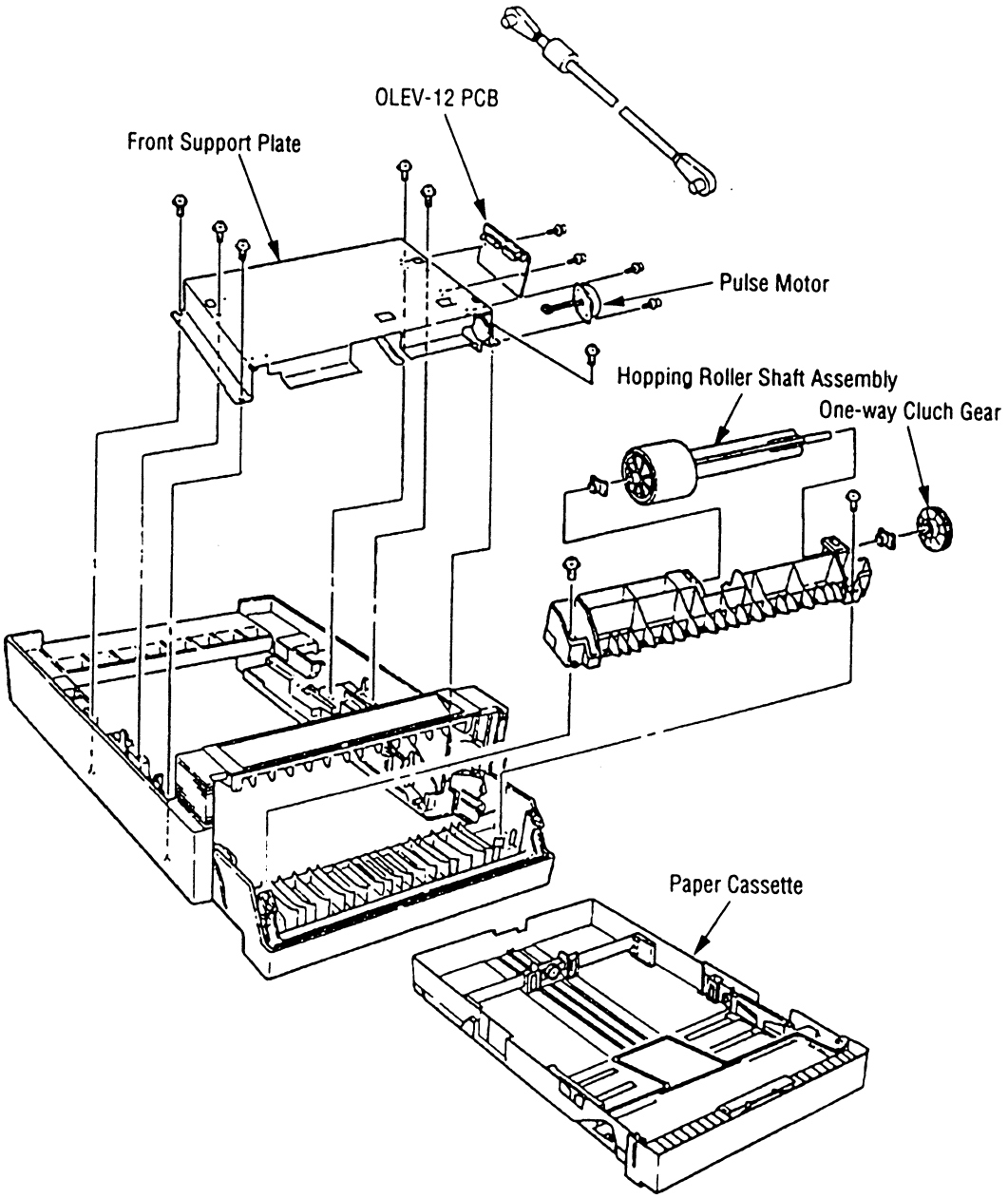

Figure 3-1

3.3 Parts Replacement Methods

This section describes the parts replacement methods for the components listed in the disassembly order diagram below.

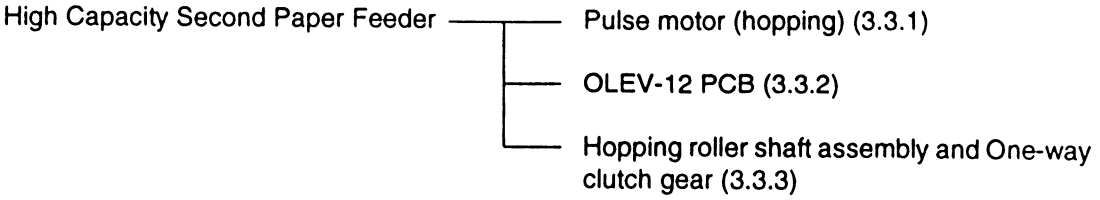

3.3.1 Pulse Motor (Hopping)

(1) Turn the printer power switch off "O" and remove the interface cable.
(2) Remove the paper casette ❶.
(3) Open the Front cover ②, stand the High Capacity Second Paper Feeder vertically and remove the 2 E-clamps ③.
(4) Remove the 2 levers ④, and remove the tension springs ⑤.
(5) Pull out the sheet guide ⑥ to the front.
(6) Remove the 6 screws ⑦, and remove the front support plate ⑧.
(7) Remove the connector ⑨ and the 2 screws ⑩, and remove the pulse motor ⓫.

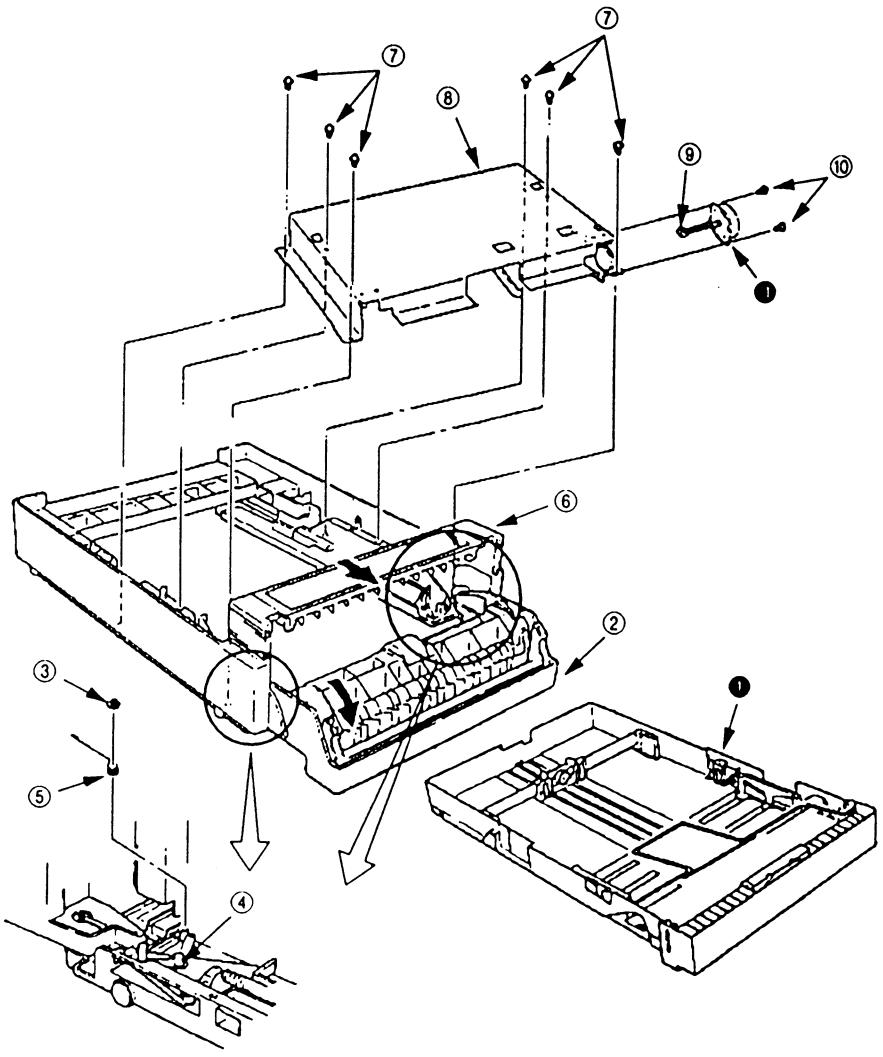

3.3.2 OLEV-12 PCB

(1) Remove the front support plate (see 3.3.1 steps (1) through (6)).
(2) Remove the connector ①, and the 2 screws ②, then remove the OLEV-12 PCB ❺.

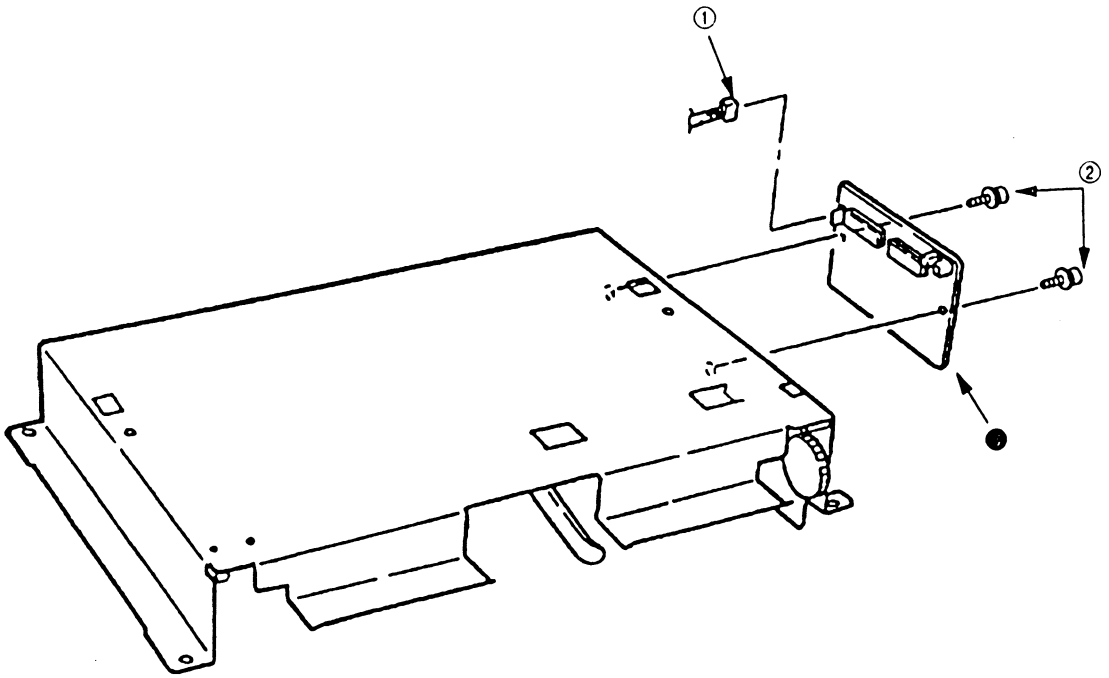

3.3.3 Hopping Roller Shaft Assembly and One-way Clutch Gear

(1) Open the front cover ①.
(2) Remove the 2 screws ②, and remove the hopping roller frame ❸ (be careful not to lose the Springs ④ when you do this, since it comes off).
(3) Remove the One-way clutch gear ❺.
(4) Remove the bush-A ❻, and remove the hopping roller shaft assembly ❼ (be careful not to lose the bush-B ❽ when you do this, since it comes off).

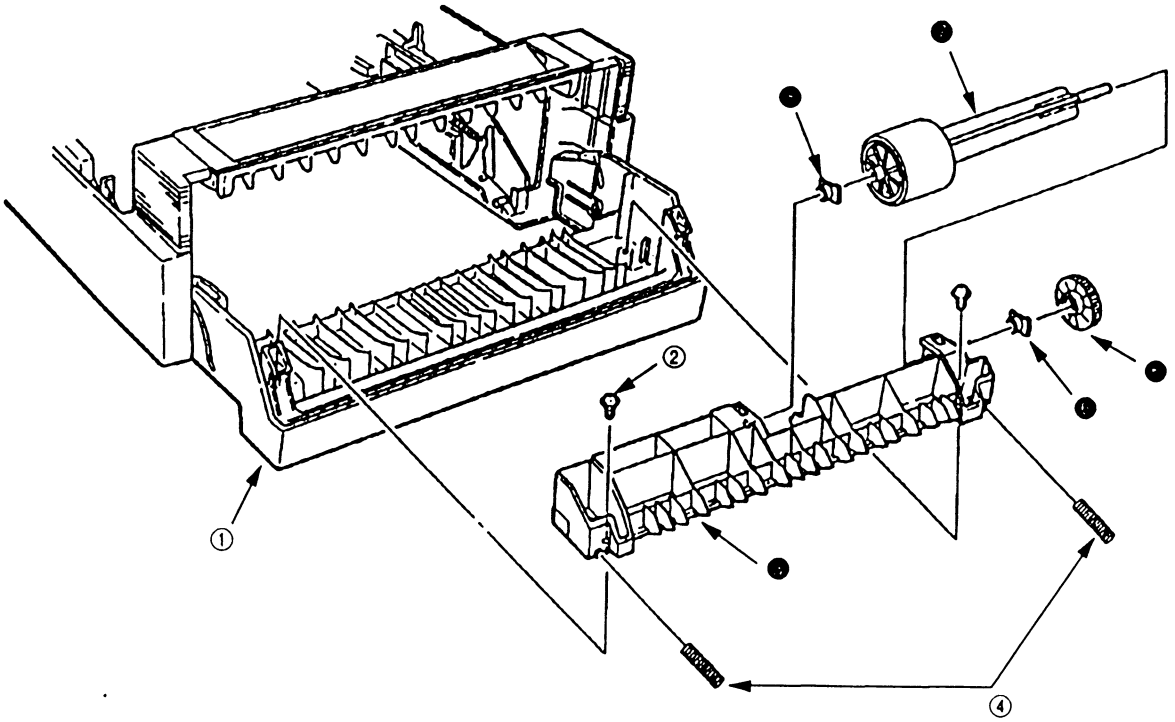

4. TROUBLESHOOTING

4.1 Precautions Prior to the Troubleshooting

(1) Go through the basic checking items provided in the Operator Guide.
(2) Obtain detailed information concerning the problem from the user.
(3) Go through the checking in the conditions similar to that in which the problem occurred.

4.2 Preparations for the Troubleshooting

(1) Display on the Operator panel
The status of the problem is displayed on the LCD (Liquid Crystal Display) on the Operator panel. Go through the appropriate troubleshooting procedures according to the messages displayed on the LCD.

[ODA]

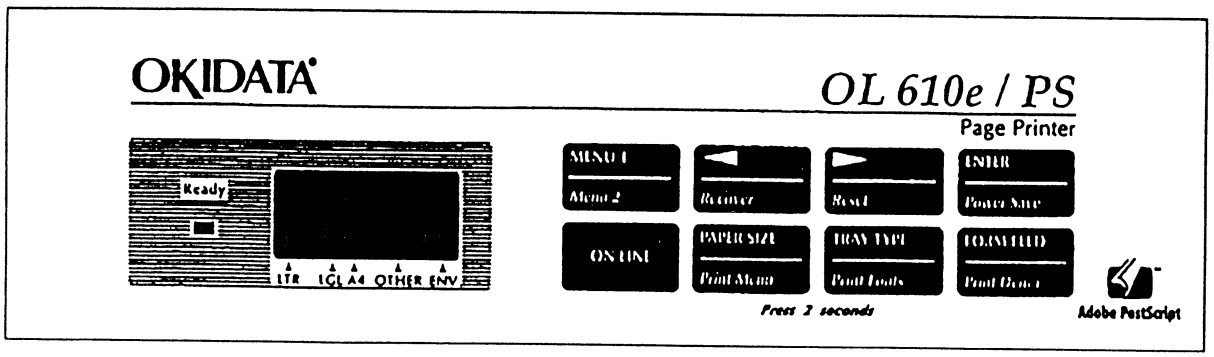

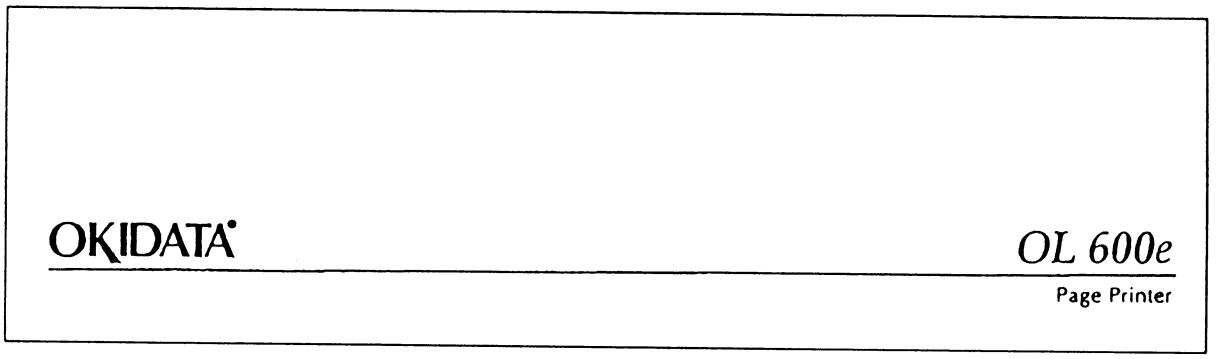

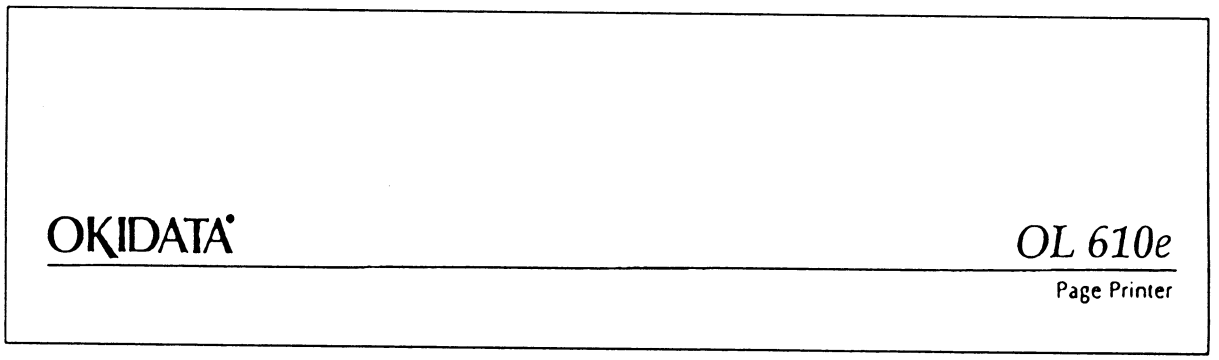

[OEL]

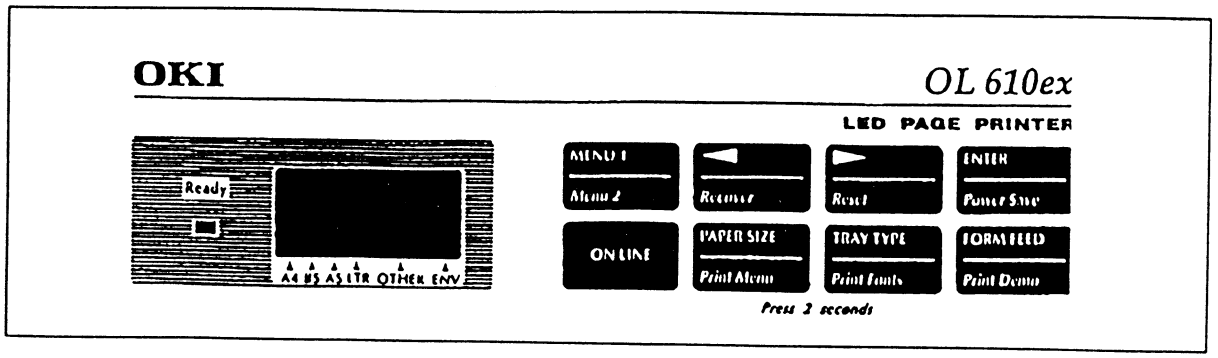
OKI
OL 610ex
LED PAGE PRINTER
Ready
A4 B5 A5 LTR OTHER ENV
MENU 1
Menu 2
Reverse
Reset
ENTER
Power Save
ON LINE
PAPER SIZE
Print Menu
TRAY TYPE
Print Fonts
FORM FEED
Print Demo
Press 2 seconds

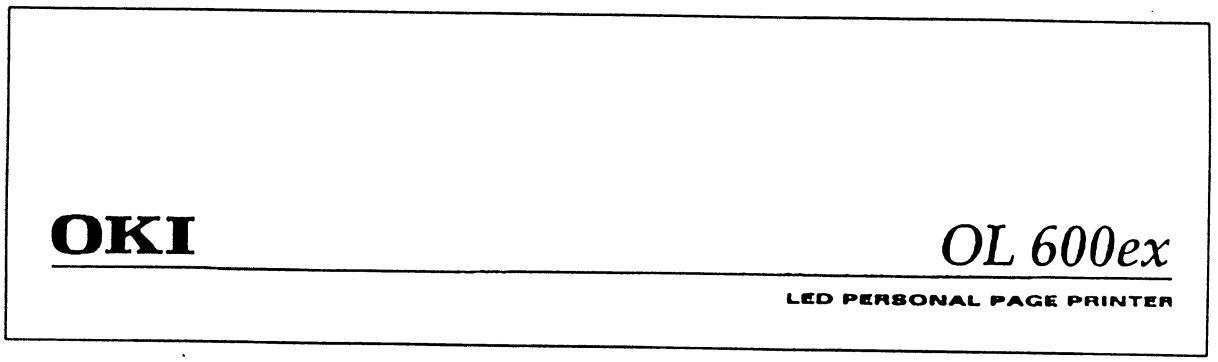
OKI
OL 600ex
LED PERSONAL PAGE PRINTER

[OKI-INT]

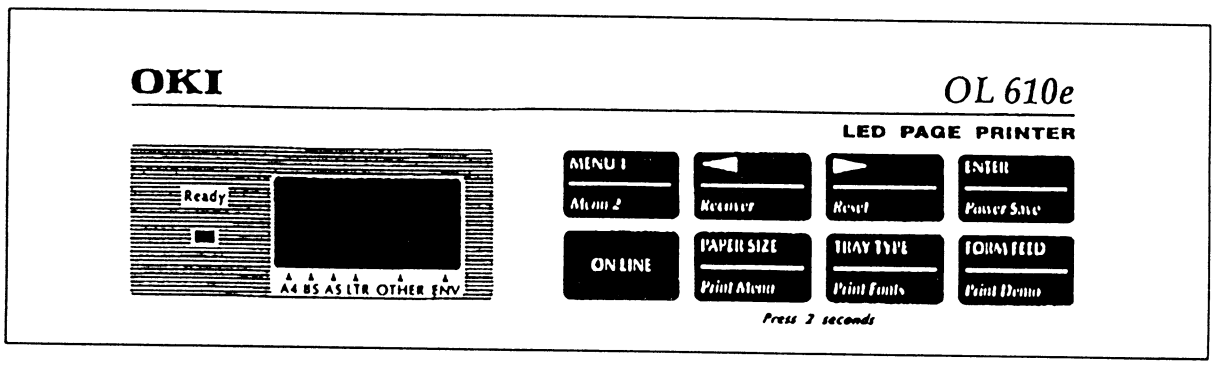
OKI
OL 610e
LED PAGE PRINTER
Ready
A4 B5 A5 LTR OTHER ENV
MENU 1
Menu 2
Reverse
Reset
ENTER
Power Save
ON LINE
PAPER SIZE
Print Menu
TRAY TYPE
Print Fonts
FORM FEED
Print Demo
Press 2 seconds

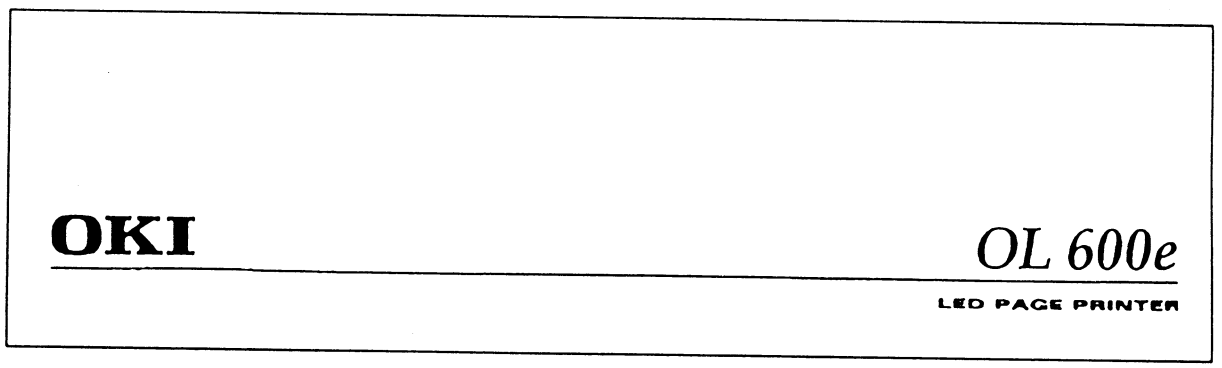
OKI
OL 600e
LED PAGE PRINTER

Status message display

Ready LED display

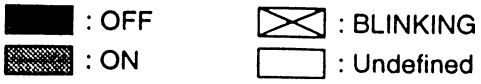

4.3 Troubleshooting Method

When a problem occurs, go through the troubleshooting according to the following procedure.

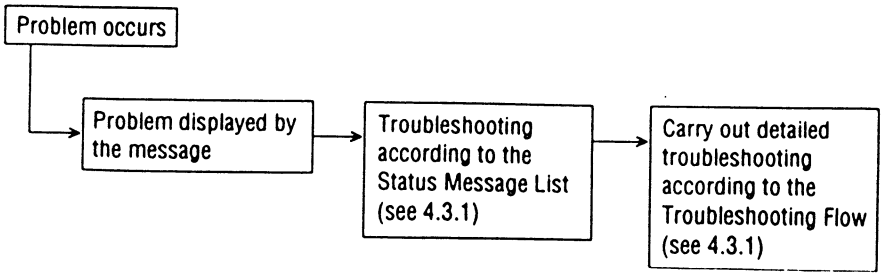

4.3.1 LCD Status Message List

The listing of the statuses and problems displayed in the form of messages on the LCD or PC display is provided in Table 4-1.

Classification	LCD Status Message and PC Display	Description	Recovery Method
Jam error	<Printer LCD Status Message> FEED PAPER INPUT JAM or FEEDER FEED JAM <PC Display Status Message> Paper Input Jam Paper Feed Jam	Notifies of occurrence of jam while the paper is being fed from High Capacity Second Paper Feeder.	• Check the paper in the High Capacity Second Paper Feeder. Carry out the recovery printing by opening and closing the cover, and turn the error display off. • When the problem occurs frequently, to through the Troubleshooting.
Paper size error	<Printer LCD Status Message> FEEDER SIZE ERR <PC Display Status Message> Paper Size Error	Notifies of incorrect size paper feeding from High Capacity Second Paper Feeder.	• Check the paper in the High Capacity Second Paper Feeder. Also check to see if there was a feeding of multiple sheets. Carry out the recovery printing by opening and closing the cover, and turn the error display off.
Tray paper out	<Printer LCD Status Message> FEEDER PAPEROUT <PC Display Status Message> Second Tray Paper Out	Notifies of no paper or paper cassette state of the High Capacity Second Paper Feeder.	• Load the paper or paper cassette in High Capacity Second paper Feeder.

• (JAM error)

Paper Inlet Jam

- Does paper jam at the inlet when the power is turned on?
  - YES — Is the paper located above the sensor plate (Inlet)?
    - • YES — Remove the paper.
  - NO — Is the sensor plate (Inlet) operating normally?
    - • NO — Replace the sensor plate (Inlet).
  - • YES — Replace the power supply board or inlet sensor.
- NO — When the paper is fed in, does the paper inlet jam occur?
  - YES — Is the paper being fed to above sensor plate (Inlet)?
    - YES — Is the sensor plate (Inlet) operating normally?
      - • NO — Replace the sensor plate. (Inlet)
    - • YES — Clean the inlet sensor on the power supply board or replace the power supply board or inlet sensor.
  - • NO — Replace the hopping roller shaft assy or paper cassette.
- NO — Is the hopping roller shaft rotating?
  - • YES — Set the paper properly.
- NO — Is the stepping motor turning?
  - • YES — Replace the one-way clutch gear on the hopping roller shaft assembly.
- NO — Is the connector cable being connected properly?
  - • NO — Connect the connector cable properly.
- YES — Check the coil resistance (approx. 32Ω) of the pulse motor. Is is normal?
  - • NO — Replace the pulse motor.
- • YES — Replace the OLEV-12 PCB.

5. CONNECTION DIAGRAM

5.1 Interconnection Diagram

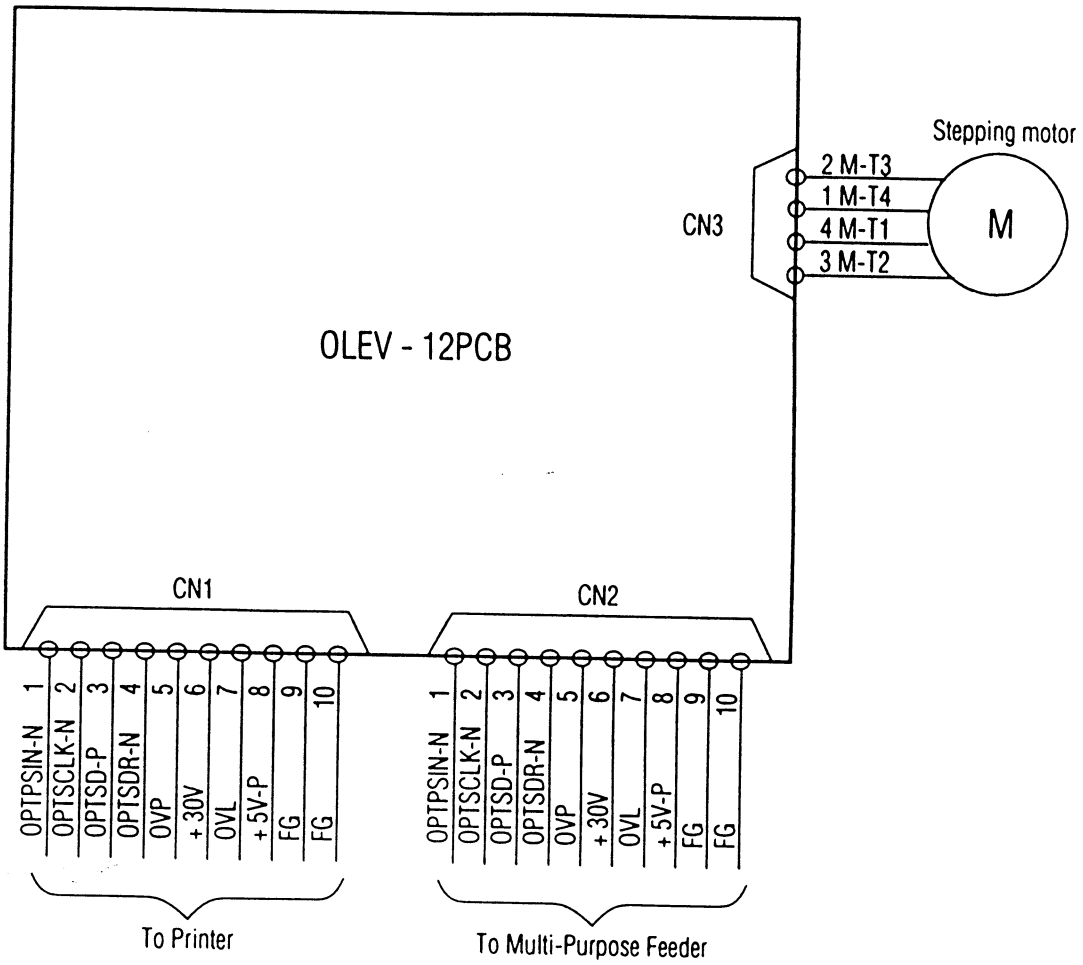

5.2 PCB Layout

OLEV-12 PCB

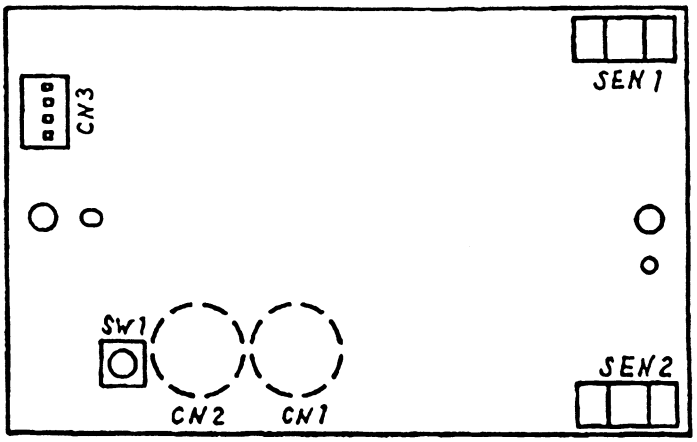

6. PARTS LIST

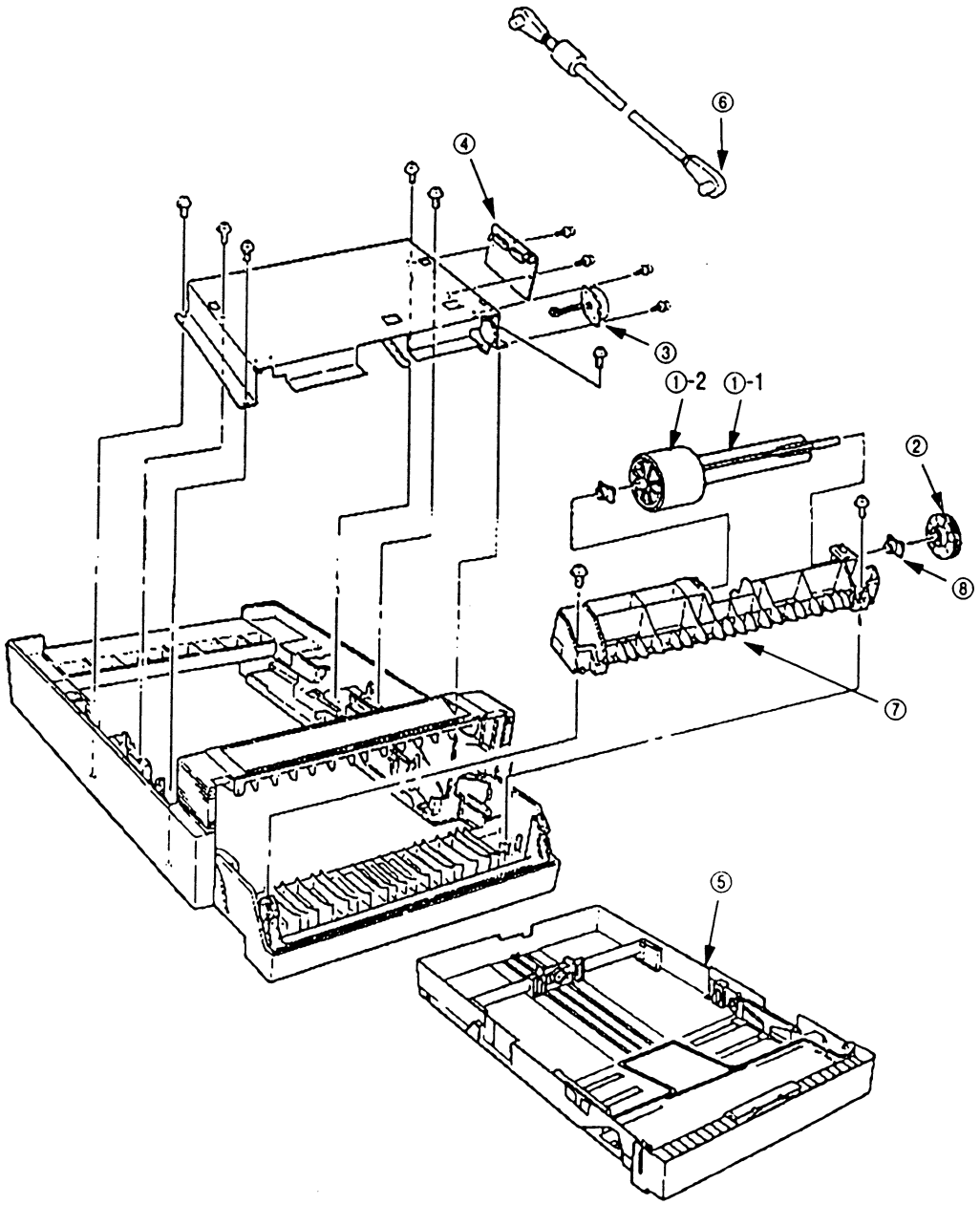

Figure 6-1 High Capacity Second Paper Feeder

Table 6-1 High Capacity Paper Feeder

No.	Description	Oki-J Part No.	Q'ty	Remark
1-1	Hopping roller shaft	3PP4083-6020P1	1	Same as the Printer Unit
1-2	Hopping roller rubber	4PB4076-5447P1	1	
2	One-way clutch gear	4PB4083-6024P1	1	Same as the Printer Unit
3	Pulse motor	4PB4083-6075P1	1	
4	OLEV-12 PCB	4YA4121-1014G12	1	
5	Paper cassette	4YA4083-6270G2	1	
6	Connection cord	3YS4011-3140P3	1	
7	Hopping roller frame	1PP4083-5605P1	1	
8	Bearing	4PP4083-6022P2	2	Same as the Printer Unit